International Journal of Power Electronics and Drive System (IJPEDS)
Vol. 17, No. 4, December 2026, pp. 2942~2952
ISSN: 2088-8694, DOI: 10.11591/ijpeds.v17.i4.pp2942-2952

Hybrid renewable systems in smart grids through enhanced control strategies

Thangavel Jothi[1], Manoharan Arun[2], Nagarajan Mohankumar[3], Ramakrishnan Santhanakrishnan[4], Ramar Vijayalakshmi[5], Subha Sharmini Kannan[6], Manepalli Kumudini Padma Lata[7], Rajamanickam Sivaranjani[8], Subbiah Murugan[9]

[1]Department of Electrical and Electronics Engineering, Shanmuganathan Engineering College, Pudukkottai, India
[2]Department of Electrical Engineering, Faculty of Engineering and Technology, Annamalai University, Chidambaram, India
[3]Symbiosis Institute of Technology, Symbiosis International (Deemed University), Pune, India
[4]School of Commerce, Vel Tech Rangarajan Dr. Sagunthala R&D Institute of Science and Technology, Avadi, India
[5]Department of Computer Science and Engineering, Easwari Engineering College, Chennai, India
[6]Department of Electrical and Electronics Engineering, SRM Institute of Science and Technology, Chennai, India
[7]Department of English, Freshman Engineering Department, Koneru Lakshmaiah Education Foundation (KL Deemed to be University), Andhra Pradesh, India
[8]Department of Electronics and Communication Engineering, Vaigai College of Engineering, Madurai, India
[9]Department of Biomedical Engineering, Saveetha School of Engineering, Saveetha Institute of Medical and Technical Sciences, Saveetha University, Chennai, India

Article Info

Article history:

Received Jul 23, 2026
Revised Aug 27, 2026
Accepted Sep 13, 2026

Keywords:

Converter
Perturb and observe
Pulse width modulation
Renewable energy
Smart grid

ABSTRACT

The potential for improving sustainability and dependability has led to an extensive amount of interest in the integration of renewable energy sources (RES), especially hybrid RES (HRES), into smart grids. However, there are still several obstacles to overcome, such as improving power quality, maintaining grid stability, and increasing energy efficiency. To improve energy extraction and stability in smart grids, this research highlights a unified control synergy between MPPT and inverter regulation. This research presents an integrated method for successful integration of HRES into smart grids that includes traditional and improved control mechanisms in order to overcome these issues. The suggested system makes use of modern control techniques to maximize energy production and maintain grid stability, such as pulse width modulation (PWM) for inverter control and the perturb and observe (P&O) algorithm for maximum power point tracking (MPPT). The development and application of a complete control system that combines the benefits of enhanced and conventional control techniques is the primary contribution. The findings highlight how integrated control techniques may help move RES closer to integration into smart grids, which will lead to more dependable and sustainable energy in the future.

This is an open access article under the CC BY-SA license.

Corresponding Author:

Thangavel Jothi
Department of Electrical and Electronics Engineering, Shanmuganathan Engineering College
Pudukkottai, Tamil Nadu, India
Email: tjothi046@gmail.com, jothielectrical2005@gmail.com, jothielectrical@gmail.com

1. INTRODUCTION

Rising world consumption of energy and dependence on fossil fuels are major concerns today. The movement towards meeting power demand via the use of renewable energy sources (RES) has been met by the worldwide electrical industry with several challenges. Consequently, RES are becoming more popular as a means of generating power. The power system presents enormous problems due to the high penetration of RES and energy management. In view of these difficulties, improving the power system's overall performance

necessitates the use of modern technology. The existing power system architecture is being improved by the integration of many technologies in a smart grid. These technologies include sophisticated automated controls, distributed generation, two-way power flow and communication, a forecasting system, and two-way communication. The smart grid system facilitates communication between energy producers and consumers, allowing for the most efficient use of energy in consideration of factors such as cost, environmental impact, and user preferences. The electricity system becomes more dependable, efficient, and secure as a result.

The electrical grid now has the capabilities and characteristics necessary to integrate and responsibly utilize renewable energy sources, because of the realization of the smart grid concept [1]. The grid was electronically and automatically automated to achieve this objective, making it both reliable and adaptable to future changes with ease. As the power grid and electricity market undergo a growing decentralization, the integration of increasingly variable sources of renewable energy into the system raises the demand for SG significantly. Technical issues such as grid connectivity, power quality, dependability, protection, generation dispatch, and control may arise with the widespread use of intermittent renewable resources [2]. Consequently, the industry must face the difficulties that come with increased penetration. Scientists have experimented with several approaches to develop power systems that can smoothly include renewable energy sources. To reduce energy losses in the system, the authors of [3] examined the many renewable energy sources that are now available and proposed a strategy for determining the most effective combination of each.

The accessibility of natural oil reserves is now the main consideration of the energy industry. While RES help create a sustainable power grid, their unpredictability, variability, and uncertainty have a major influence on power quality and dependability [4]. Furthermore, the grid is vulnerable to fault conditions since the majority of the commonly utilized renewable energy technologies lack inertia tolerance. A monitoring and communication network, together with extra support systems, is crucial for overcoming these obstacles [5]. In order to achieve a sustainable and dependable energy supply, smart grids must include RES. A potential approach to address the growing energy needs while decreasing dependence on fossil fuels is hybrid renewable energy sources (HRES), which integrate various renewable energy sources including wind and solar. Nevertheless, enhancing power quality, guaranteeing grid stability, and increasing energy economy are some of the issues that come with efficiently integrating HRES into smart networks [6]. Improving the system's energy efficiency is the main objective, which includes finding methods to use the full potential of renewable energy sources like wind and solar. Ensuring a stable grid is another challenge, especially in systems that use a lot of renewable energy. Power production changes caused by renewable sources' variability and intermittency represent a threat to the dependability and stability of the grid [7].

When it comes to smart grids and HRES, control techniques are vital for overcoming these obstacles and maximizing performance. While conventional control systems like fixed frequency control and constant voltage control provide fundamental regulation, they may not be able to fully use energy from renewable sources or ensure the grid's best efficiency [8]. On the other hand, modern control techniques provide more complex algorithms to maximize power production, storage, and distribution, which in turn leads to greater stability and efficiency. Researchers have looked at grid integration technologies, systems for energy management, and sophisticated control algorithms as part of this integration. The creation of sophisticated control algorithms for renewable energy systems has been the subject of some study [9]. To maximize the energy production of solar systems, for instance, [10] suggested a fuzzy logic-based control technique. Solar power generating efficiency and grid stability are both improved by this method. The application of optimization methods to the integration of renewable energy sources is another topic that has been studied. Wind power generating performance and grid dependability may both be greatly improved using this method [11]. Researchers have looked at control strategies, optimization methods, and energy storage systems as potential tools for integrating RES [12], [13].

To incorporate HRES into smart grids efficiently [14], the study primarily contributes by creating and implementing an integrated control system that includes conventional and advanced control procedures. To enhance energy production and ensure grid stability, the proposed system employs sophisticated control methods such as pulse width modulation (PWM) for inverter management and the perturb and observe (P&O) algorithm for maximum power point tracking (MPPT). To show how well these solutions work and how far it may advance smart grid incorporation of RES, simulation experiments will be performed in this study. This study focuses on a simple but efficient combination of P&O MPPT and PWM inverter regulation as a baseline for assessing control coordination in hybrid RES, even if other research has concentrated on sophisticated control and optimisation (like incremental conductance, fuzzy, or ANN-based approaches) [15]-[17]. This framework acts as a foundation for more complex control methods that will be investigated in later studies.

2. METHOD

A DC bus, an AC bus, or a hybrid DC/ACbus is one way to connect RES. Most generators and loads have different types of output power; thus, selecting the right configuration is important. So, if the generators

and loads are mostly DC, proceed with DC-bus coupling, and if they are mostly AC, proceed with AC-bus coupling. It is recommended to use a hybrid-coupled integration technique if the HRES's main power sources provide a combination of AC and DC power.

2.1. Integration of renewable energy systems in smart grid

Power consumption patterns are changing substantially, along with the rise of RES. Some that were previously there have grown considerably. Electric vehicles and heat pumps are among the others that are expanding and will add to the already increasing demand for power. These shifts need electrical grid regulation due to the following reasons: Seasonal fluctuations in electricity usage are substantial. Winter season energy use is greater than summertime consumption. Power generation methods are becoming more unpredictable because of the intermittent nature of renewable sources, which experience daily peaks and valleys. A dramatic expansion of production sites and the injection of electricity into distribution networks intended for transportation rather than collection are outcomes of the rise of decentralized production. Changes to the standard operating procedures for the electrical grid and adjustments to the way the grid is observed and controlled are necessitated by these limitations [18]. Grid operators in particular suffer technological challenges due to the large-scale integration of renewable energy into electricity systems. The placement of manufacturing facilities is the primary concern. Actually, networks that were initially constructed to deliver energy in just one way may now operate in both directions because of decentralized production integration. The electrical system's control of intermittent production methods is the subject of the second. When penetration rates are low, the electrical infrastructure can sustain intermittent output with little damage. Alternatively, imbalances might emerge as the penetration rate rises [19].

The ability to create a hybrid system with additional sources of energy is the main benefit of renewable energy sources. A hybrid energy system is one that uses a combination of thermal or electrical power from two or more separate sources [20]. Renewable energy hybrid systems are already on the market, and they can function both on and off the grid. In rural and remote areas, diesel generators are utilized in combination with systems that operate independently of the grid to produce electricity. To satisfy the electrical energy demand of a distant or nearby facility, an urban or rural home, a farm, or even a community, hybrid energy systems include equipment for electricity production and storage batteries. Hybrid energy systems are typically designed to guarantee a consistent electrical energy supply. This is because, in systems that rely on a single renewable source for load supply, that source could be turned off at any moment. In an energy system that uses a traditional energy source, the purpose is to lower the price of electrical energy per unit. Wind turbines, photovoltaic cells, fuel cells, and batteries are all part of the combination of renewable energies of a hybrid system, which is shown in Figure 1.

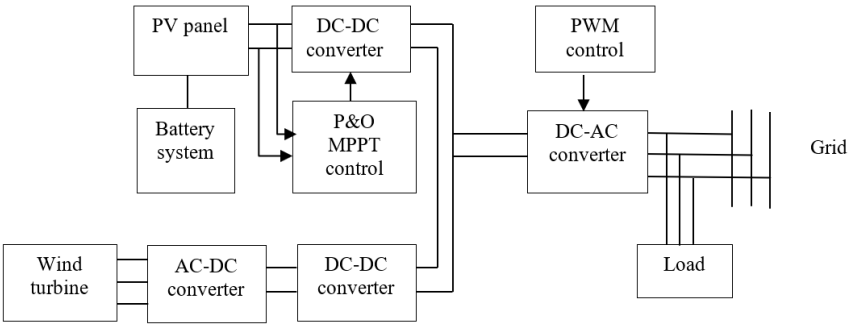

Figure 1. Hybrid RES integration in smart grid

A number of essential parts comprise the system design for introducing HRES into the smart grid. These include PV panels, wind turbines, batteries, a bidirectional converter, and a connection to the grid. MPPT and PWM are two of the control methods described in the concept that are used to maximize the system's performance. The existing energy system's dependence on fossil fuels is hazardous to the environment because of the carbon emissions it produces. Because of their widespread usage and minimal impact on the environment, RES are gaining widespread support throughout the world. The PV system is made up of solar panels, which convert the sun's rays into energy. By monitoring the PV system's highest power point, the P&O algorithm [21] maximizes the system's energy production. Wind turbines are a part of the wind system because they turn the wind's kinetic energy into usable power. Another application of the P&O algorithm is to monitor the wind system's maximum power point. If the PV and wind systems produce

more energy than is needed, it may be stored in the battery storage system. The bidirectional converter is connected to it, enabling the flow of energy to and from the battery. The PV and wind systems generate DC electricity, which is then converted into AC power for the grid by the bidirectional converter. It uses PWM to control the grid's power supply voltage and frequency as well. The HRES is linked to the electric grid via the smart grid, an integrated system. The HRES and the grid can check and regulate one another's power flows due to the built-in communication and control mechanisms [22].

Smart and microgrid energy storage technologies are useful for controlling hourly price and demand fluctuations. Various applications may be supported by energy storage systems. It has potential as a power storage solution for grids that produce and distribute electricity in a stationary fashion. Examples include the country's power infrastructure, various military installations, and so forth. The fact that they are useful in so many different contexts is crucial. In addition to advancements in battery technology, the BMS plays a crucial role in ensuring the safe, dependable, and efficient usage of batteries in smart grids and electric vehicles. Not only does the BMS ensure the safety and longevity of the battery by controlling its operating conditions, but it also provides the smart grid and electric vehicles' energy management modules with exact projections of the battery's state of charge and state of health [23], [24]. In order to accomplish these objectives, a BMS is equipped with many capabilities that allow for the management and monitoring of the battery's operating condition at various levels, including the cell, module, and pack.

Energy harvested from renewable sources, such as the sun or the wind, is stored in the system's battery. By interconnecting the batteries in either series or parallel, any capacity may be achieved. When it comes to wind and solar power systems, maintenance-free dry-type batteries with the best performance need certain electrolytes. In order to regulate the constant DC-link voltage as a reference value and initiate the discharge or charging of the battery bank according to the energy demand on the load side, the bidirectional DC-DC converter is primarily used. With bidirectional DC converter control, power exchange is achieved when the battery voltage is lower than the DC-link reference value. The control system for power management is responsible for producing the reference power for the converter. The battery's reference current (I_{refb}) can be calculated using (1).

$$I_{refb} = \frac{P_{refbd/refbc}}{V_b} \quad (1)$$

Where P_{refbd} is the reference of battery discharge, P_{refbc} is the reference of battery charging, and Vb is the battery charging voltage. The battery bank is used to maintain power balance by discharging and charging within defined limits whenever the AC/DC load's power is excessive or inadequate. After the battery bank reaches its full charge-carrying capacity, any remaining extra solar power is sent back to the grid via a bidirectional active rectifier while the state of charge (SOC) is monitored and controlled.

2.2. MPPT P&O control algorithm

MPPT often necessitates simplicity, low cost, rapid tracking in dynamic environments, and minimal output power variation. To get the most out of the ever-changing wind speed and solar irradiation conditions, an MPPT algorithm is essential for wind and PV systems. The P&O technique is the most often used tracking algorithm among all the methods for MPPT in the literature because of its simple layout and ease of implementation. The power output of the PV is obtained from (2). The (2) provides the relationship between the PV output voltage and the DC link voltage.

$$P_{pv} = I_{pv}V_{pv} \quad (2)$$

$$V_{pv} = V_{dc}\left(\frac{1}{1-D}\right) \quad (3)$$

The article suggests a hybrid renewable energy system that uses the P&O MPPT control algorithm to monitor the best possible output from the PV and wind generators. Consequently, the size and complexity of the system are increased since every renewable energy source has its own P&O MPPT. Therefore, the improved single P&O control method incorporates the control algorithms of both MPPTs. Here, V_{pv}, V_w, I_{pv}, and I_w are the input parameters for the proposed MPPT. A single matrix-based voltage variable (V) stores the voltages from both sources, and a single matrix-based current variable (I) stores the currents. This approach finds the output power (P) from renewable energy sources by sensing the voltage (V) and current (I) values, with voltage being the perturbing factor. In order to determine the maximum power output from the renewable energy source, the change in voltage (ΔV) and change in power (ΔP) are computed by comparing the current values with the prior values. If the value of ΔP is positive, the ΔV value is checked. The duty cycle (D) level is reduced with an established step size (ΔD) if it is positive, and increased with ΔD

if it is negative. In a similar vein, the value of ΔV is verified if ΔP is negative. The operation is repeated until it hits the MPP from both the Solar and wind resources simultaneously, and then it provides the appropriate duty ratios for each source. If it's positive, the D value is increased by ΔD. If it's negative, the D value is decreased by ΔD. Figure 2 shows the flow diagram of the P&O MPPT control method.

The MPP varies for PV systems that rely on solar energy because of the wide range of temperature and radiation variations. Therefore, in order to dynamically adapt the MPP as a starting point for different inputs, the MPPT method is necessary. Installed between the solar panels and the tracking algorithm-controlled load is the MPPT application, which is a DC/DC converter. The power change is defined by (4), which also describes the P&O algorithm technique.

$$\Delta P = P(n) - P(n-1) \tag{4}$$

The basic concept of P&O is to manage the PV system so that the amount of power generated from it rises. If the amount of power change is positive, the incremental duty cycle would remain constant to decrease or raise the PV voltage, according to the technique's flowchart and the above equation. However, if the power change is negative, the direction of the incremental duty cycle command would be reversed. While the inverter PWM manages grid current and voltage phase synchronisation, the PV MPPT adjusts the duty ratio of the converter to maintain the ideal DC voltage. Power transmission is made smooth by this integrated effort.

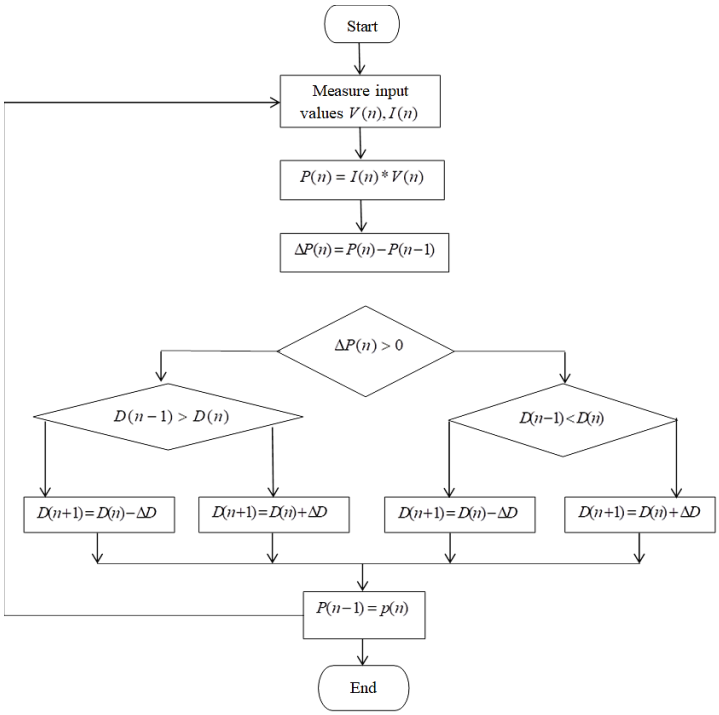

Figure 2. Flow chart of the P&O algorithm

2.3. PWM control for grid-connected inverter

PWM switching methods have gained popularity in the field of power electronics and drive circuits. Motor speed control, audio amplifiers, converters, and many more applications utilize PWM [25]. A single PWM approach is not going to be able to handle all possible situations. Due to advancements in solid-state power electronics and microprocessors, several PWM methods have been created for use in different industries. Using PWM to regulate the inverter's output voltage and lower its harmonic content is its primary function. To regulate voltage, most people use PWM methods. These methods regulate the power sources of the switching devices and are the most efficient. To convert direct current (DC) electricity from renewable sources like PV and wind systems into alternating current (AC) power for the grid, the voltage source inverter (VSI) is an essential component of HRES that are integrated into smart grids. To make sure the VSI is compatible with the grid's requirements, PWM controls the output voltage and frequency.

PWM is based on changing the duty cycle, which in turn controls the mean voltage output of a pulse train. Using PWM, the VSI's output voltage may be adjusted by adjusting the duty cycle. The study makes use of PWM to simulate the grid's voltage pattern by converting the VSI into an AC output voltage that is sinusoidal. The VSI's control system makes use of PWM in the suggested study. In order to produce the required PWM waveform, the control system manages the switching devices of the VSI. The control system may regulate the output voltage to meet the grid's voltage needs by modifying the duty cycle of the PWM waveform. By controlling the on and off times of the inverter components, these methods are able to produce a controllable AC output voltage from a fixed DC input voltage. As a result of various PWM signals, the inverter's on and off times may be adjusted. The PWM signals are pulses with a fixed amplitude and frequency and a variable pulse width. Even though the present study uses traditional PWM and P&O algorithms, future research will examine how to increase dynamic responsiveness and efficiency using techniques like sinusoidal PWM or incremental conductance.

3. RESULTS AND DISCUSSION

This research analyzes simulations using renewable energy production on a daily basis, namely energy from wind and PV systems. The MATLAB/Simulink platform is used to study and implement the performance of the suggested technique as shown in Figure 3. The DC-DC converter links the system's three power sources to the DC bus station. The study's findings show that the suggested PWM control method for the grid-connected voltage source inverter (VSI) works well when it comes to smart grid integration with HRES. MPPT P&O method, DC bus voltage, grid voltage and current across the load, and THD of the grid voltage were some of the important performance metrics that were the focus of the research.

The simulation findings demonstrate that the MPPT P&O approach efficiently and steadily operates by tracking the solar system's greatest power point. To maintain efficient energy conversion and grid transmission, the DC bus voltage stays within the specified range. The maximum voltage reaches 86 V using the P&O algorithm. Figure 4 presents the MPPT-controlled DC bus voltage of the PV system.

In order to keep the grid voltage and current across the load at the specified values, the VSI's PWM control approach is used. The VSI maintains a consistent output voltage in sync with the grid's voltage waveform, whereas the PWM method keeps the output current within the allowed range. The result in Figure 5 shows 110 V of grid voltage and 75 A of grid current. An essential measure of power quality is the THD of the grid voltage. In order to maintain a clean and consistent power supply to the grid, the findings demonstrate that the PWM management method successfully lowers the grid voltage's THD. The THD of the grid voltage is 11.55% as shown in Figure 6.

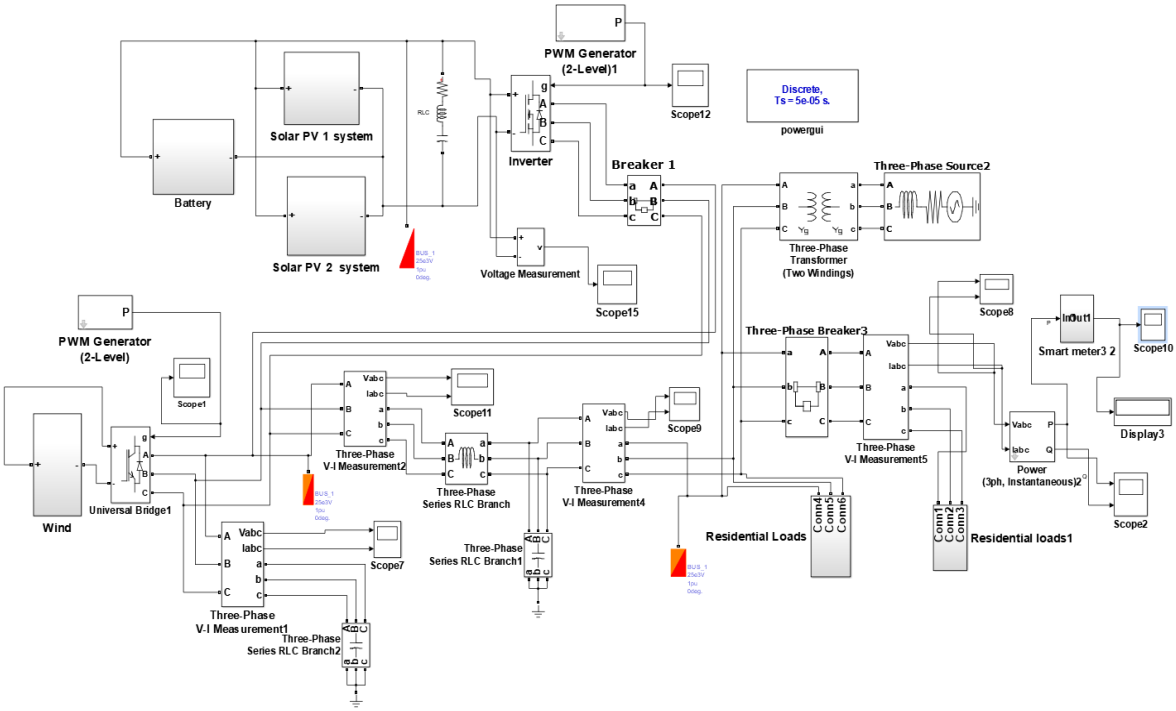

Figure 3. Hybrid RES-based smart grid simulation

Figure 6 illustrates that the grid voltage without filtering has a THD of 11.55%, above the IEEE 519 recommended limit of less than 5%. The absence of a tuned passive filter at the point of common coupling (PCC) and the inverter switching harmonics are the main causes of the high THD value. A single-stage LC filter (L = 3 mH, C = 10 µF) has been included between the inverter output and the grid to enhance power quality. The IEEE 519 standard was met by the filtered output, which demonstrated a THD reduction of 3.82%. The 5th- and 7th-order harmonics, which were the most prominent before filtering, were much reduced after filtering. The VSI successfully controlled the output voltage within ±2.5 percent of the nominal value under dynamic operating circumstances, such as abrupt irradiance decrease (1000 → 700 W/m^2) and load step shift (50 → 75% rated load), with a transient recovery duration less than 45 ms. This indicates the system's resilience and the suggested control strategy's quick reaction to changes in real time.

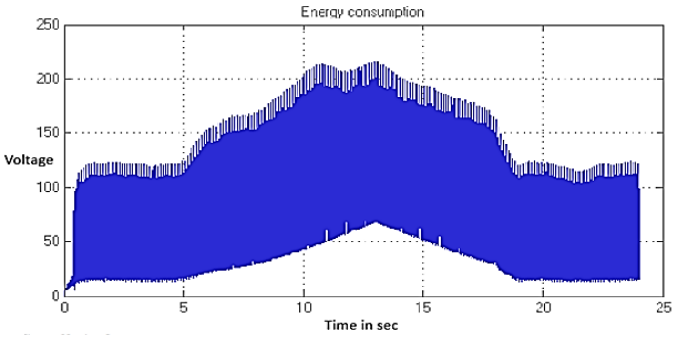

Figure 4. MPPT-controlled DC bus voltage of the PV system

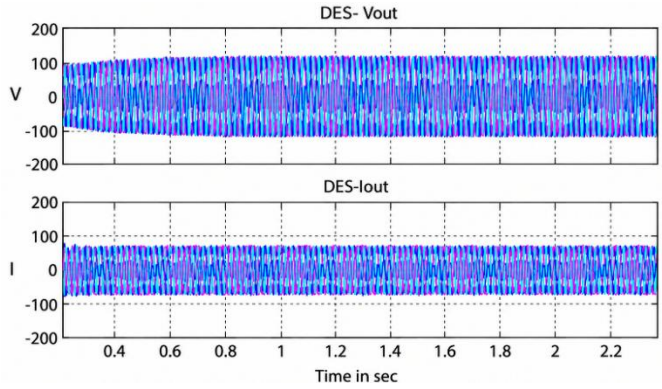

Figure 5. Output voltage and current of the inverter

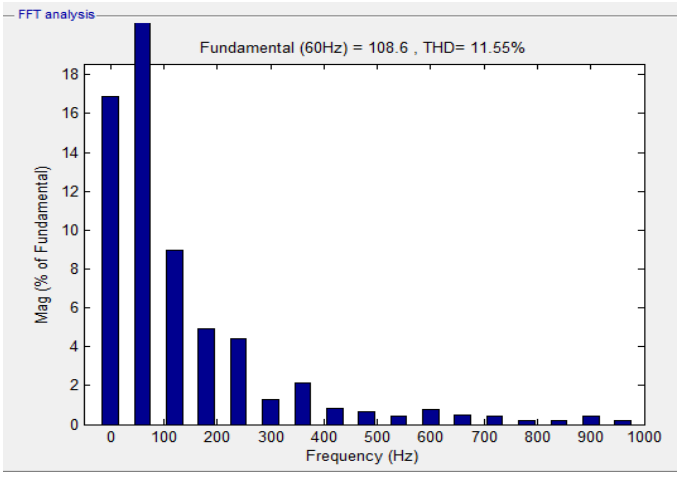

Figure 6. THD of grid voltage

The results show that the suggested PWM control method for grid-connected VSIs improves smart grid integration effectiveness, reliability, and power quality. By regulating the VSI's output voltage and current, the PWM control method maintains grid compatibility and stability, while the MPPT P&O technique maximizes the extraction of energy from the solar system. As long as the grid voltage has a low THD, the system is suitable for use in grid-connected applications. Because of harmonics and ripples in the grid's voltage and current, this research has some limitations. Future research will investigate more sophisticated filtering methods and control methods to overcome these constraints and enhance system efficiency as well as power quality. To make sure that HRES in smart grids run more efficiently and steadily, we will further optimize the MPPT algorithm and PWM management technique to reduce harmonic distortion and voltage fluctuations.

4. CONCLUSION

The study's primary objective was to determine the most effective method to include a PWM-controlled VSI into an hybrid renewable energy sources (HRES) so that it could be part of a smart grid. Energy conservation, grid stability, and power quality were the metrics used to evaluate the system's performance. The results show that the suggested control method successfully monitors and controls the VSI's output voltage and current, making it consistent with grid demands. By regulating the VSI's output voltage and current, the PWM control method maintains grid compatibility and stability, while the MPPT P&O technique maximizes the extraction of energy from the solar system. The research finds a few limitations, however, such as DC bus voltage ripples and grid voltage and current harmonics. Future research will focus on improving system efficiency and energy quality by developing new filtering algorithms and control strategies to overcome these restrictions. This study's results support smart grid integration of renewable energy sources by demonstrating the significance of effective control mechanisms in achieving these goals.

FUNDING INFORMATION

Authors state no funding involved.

AUTHOR CONTRIBUTIONS STATEMENT

This journal uses the Contributor Roles Taxonomy (CRediT) to recognize individual author contributions, reduce authorship disputes, and facilitate collaboration.

Name of Author	C	M	So	Va	Fo	I	R	D	O	E	Vi	Su	P	Fu
Thangavel Jothi	✓	✓	✓	✓	✓	✓		✓	✓	✓			✓	
Manoharan Arun		✓				✓	✓			✓	✓			
Nagarajan Mohankumar	✓	✓			✓			✓	✓			✓	✓	
Ramakrishnan Santhanakrishnan	✓	✓	✓		✓	✓	✓		✓		✓		✓	
Ramar Vijayalakshmi		✓		✓	✓		✓	✓	✓				✓	
Subha Sharmini Kannan	✓		✓			✓		✓	✓	✓	✓	✓		
Manepalli Kumudini Padma Lata		✓		✓	✓				✓		✓			
Rajamanickam Sivaranjani	✓	✓				✓			✓	✓		✓		
Subbiah Murugan	✓		✓			✓		✓		✓			✓	

C : **C**onceptualization
M : **M**ethodology
So : **So**ftware
Va : **Va**lidation
Fo : **Fo**rmal analysis
I : **I**nvestigation
R : **R**esources
D : **D**ata Curation
O : Writing - **O**riginal Draft
E : Writing - Review & **E**diting
Vi : **Vi**sualization
Su : **Su**pervision
P : **P**roject administration
Fu : **Fu**nding acquisition

CONFLICT OF INTEREST STATEMENT

Authors state no conflict of interest.

DATA AVAILABILITY

The data that support the findings of this study are available from the corresponding author, [TJ], upon reasonable request.

REFERENCES

[1] T. Kataray *et al*., "Integration of smart grid with renewable energy sources: Opportunities and challenges – a comprehensive review," *Sustainable Energy Technologies and Assessments*, vol. 58, Aug. 2023, doi: 10.1016/j.seta.2023.103363.

[2] P. Arul, M. Meenakumari, L. Saravanan, N. Revathi, S. Jayaprakash, and S. Murugan, "Intelligent power control models for the IoT wearable devices in BAN networks," in *2023 International Conference on Intelligent and Innovative Technologies in Computing, Electrical and Electronics (IITCEE)*, IEEE, Jan. 2023, pp. 820–824, doi: 10.1109/IITCEE57236.2023.10090918.

[3] I. Alotaibi, M. A. Abido, M. Khalid, and A. V. Savkin, "A comprehensive review of recent advances in smart grids: A sustainable future with renewable energy resources," *Energies*, vol. 13, no. 23, Nov. 2020, doi: 10.3390/en13236269.

[4] J. Balasubramani and S. R, "EEG-Based Autism Detection Framework Using Axial Chrono Transformer Network with Chaotic Birds of Prey Optimization," in *2026 International Conference on Machine Learning and Autonomous Systems (ICMLAS)*, IEEE, Mar. 2026, pp. 1599–1606, doi: 10.1109/ICMLAS67792.2026.11483813.

[5] S. D. Ahmed, F. S. M. Al-Ismail, M. Shafiullah, F. A. Al-Sulaiman, and I. M. El-Amin, "Grid integration challenges of wind energy: a review," *IEEE Access*, vol. 8, pp. 10857–10878, 2020, doi: 10.1109/ACCESS.2020.2964896.

[6] M. A. Mohamed and A. M. Eltamaly, "Modeling and simulation of smart grid integrated with hybrid renewable energy systems," in *Studies in Systems, Decision and Control*, 2018.

[7] A. Shahid, "Smart grid integration of renewable energy systems," in *2018 7th International Conference on Renewable Energy Research and Applications (ICRERA)*, IEEE, Oct. 2018, pp. 944–948, doi: 10.1109/ICRERA.2018.8566827.

[8] N. Kanagaraj, M. Vijayakumar, M. Ramasamy, and O. Aldosari, "Energy management and power quality improvement of hybrid renewable energy generation system using coordinated control scheme," *IEEE Access*, vol. 11, pp. 93254–93267, 2023, doi: 10.1109/ACCESS.2023.3299035.

[9] N. T. Mbungu, R. C. Bansal, and R. Naidoo, "Smart energy coordination of a hybrid wind/ PV with battery storage connected to grid," *The Journal of Engineering*, vol. 2019, no. 18, pp. 5109–5113, Jul. 2019, doi: 10.1049/joe.2018.9235.

[10] M. R. Sudha *et al.*, "Predictive modeling for healthcare worker well-being with cloud computing and machine learning for stress management," *International Journal of Electrical and Computer Engineering (IJECE)*, vol. 15, no. 1, Feb. 2025, doi: 10.11591/ijece.v15i1.pp1218-1228.

[11] S. A. Mohamed, M. A. Tolba, A. A. Eisa, and A. M. El-Rifaie, "Comprehensive modeling and control of grid-connected hybrid energy sources using MPPT controller," *Energies*, vol. 14, no. 16, Aug. 2021, doi: 10.3390/en14165142.

[12] K. Kumar, N. R. Babu, and K. R. Prabhu, "Design and analysis of modified single P&O MPPT control algorithm for a standalone hybrid solar and wind energy conversion system," *Gazi University Journal of Science*, vol. 30, no. 4, pp. 296–312, 2017.

[13] I. Atawi and A. Kassem, "Optimal control based on maximum power point tracking (MPPT) of an autonomous hybrid photovoltaic/storage system in micro grid applications," *Energies*, vol. 10, no. 5, May 2017, doi: 10.3390/en10050643.

[14] R. K. Rao, P. Srinivas, and M. V. S. Kumar, "Design and analysis of various inverters using different PWM techniques," *The International Journal of Engineering and Science (IJES)*, vol. 11, no. 4, pp. 41–51, 2014.

[15] C. Sun, J. Ling, and J. Wang, "Research on a novel and improved incremental conductance method," *Scientific Reports*, vol. 12, no. 1, Sep. 2022, doi: 10.1038/s41598-022-20133-7.

[16] M. B. Smida and A. Sakly, "Fuzzy logic control of a hybrid renewable energy system: A comparative study," *Wind Engineering*, vol. 45, no. 4, pp. 793–806, Aug. 2021, doi: 10.1177/0309524X211028783.

[17] S. Elumalai and S. R, "Hybrid framework for breast cancer classification using deep feature extraction and Chebyshev fossa optimization based feature selection," in *2025 9th International Conference on I-SMAC (IoT in Social, Mobile, Analytics and Cloud) (I-SMAC)*, IEEE, Oct. 2025, pp. 1414–1420, doi: 10.1109/I-SMAC65734.2025.11597847.

[18] H. Chen and H. Zhao, "Review on pulse-width modulation strategies for common-mode voltage reduction in three-phase voltage-source inverters," *IET Power Electronics*, vol. 9, no. 14, pp. 2611–2620, Nov. 2016, doi: 10.1049/iet-pel.2015.1019.

[19] A. Ahmed, S. P. Biswas, M. S. Anower, M. R. Islam, S. Mondal, and S. M. Muyeen, "A hybrid PWM technique to improve the performance of voltage source inverters," *IEEE Access*, vol. 11, pp. 4717–4729, 2023, doi: 10.1109/ACCESS.2023.3235791.

[20] M. Vujacic, O. Dordevic, and G. Grandi, "Evaluation of DC-link voltage switching ripple in multiphase PWM voltage source inverters," *IEEE Transactions on Power Electronics*, vol. 35, no. 4, pp. 3478–3490, Apr. 2020, doi: 10.1109/TPEL.2019.2936429.

[21] X. Wu, G. Tan, Z. Ye, Y. Liu, and S. Xu, "Optimized common-mode voltage reduction PWM for three-phase voltage-source inverters," *IEEE Transactions on Power Electronics*, vol. 31, no. 4, pp. 2959–2969, Apr. 2016, doi: 10.1109/TPEL.2015.2451673.

[22] W. Anjum, A. R. Husain, J. Abdul Aziz, M. A. Abbasi, and H. Alqaraghuli, "Continuous dynamic sliding mode control strategy of PWM based voltage source inverter under load variations," *PLOS ONE*, vol. 15, no. 2, Feb. 2020, doi: 10.1371/journal.pone.0228636.

[23] M. Asif; D. Sardar Ali, "Power quality of a smart grid using," *International Journal of Electrical Engineering & Technology*, vol. 11, no. 2, pp. 95–105, 2020.

[24] R. Jayanthi and S. T. Rama, "IoT based smart energy tracking system," *International Journal of MC Square Scientific Research*, vol. 9, no. 1, pp. 98–108, Apr. 2017, doi: 10.20894/IJMSR.117.009.001.012.

[25] J. Balasubramani, S. Rajendran, M. Zakariah, and A. Alnuaim, "Ensemble of deep learning with crested porcupine optimizer based autism spectrum disorder detection using facial images," *Computers, Materials & Continua*, vol. 83, no. 2, pp. 2793–2807, 2025, doi: 10.32604/cmc.2025.062266.

BIOGRAPHIES OF AUTHORS



Thangavel Jothi is affiliated with Shanmuganathan Engineering College, India. She received his B.E. degree in electrical and electronics engineering from Annamalai University, India, in 2003 and his M.E. degree in power systems from the same university in 2005. She has supervised more than 25 B.E. students and five M.E. students. His academic and research activities focus on electrical engineering, particularly power systems. She can be contacted at email: tjothi046@gmail.com, jothielectrical2005@gmail.com, or jothielectrical@gmail.com.



Dr. Manoharan Arun received his B.E. degree in electrical and electronics engineering from Bharathidasan University, India, in 2001. He received his M.E. degree in power systems and his Ph.D. in electrical engineering from Annamalai University, India. He has supervised more than 25 M.E. students and two Ph.D. students. He has authored or co-authored more than 20 research papers indexed in Scopus. He can be contacted at email: arunmano80@gmail.com.



Dr. Nagarajan Mohankumar was born in India in 1978. He received his B.E. degree from Bharathiar University, Tamil Nadu, India, in 2000, and his M.E. and Ph.D. degrees from Jadavpur University, Kolkata, India, in 2004 and 2010, respectively. He joined the Nano Device Simulation Laboratory in 2007 and worked as a senior research fellow under the CSIR Direct Scheme until September 2009. He subsequently joined SKP Engineering College as a Professor, where he was involved in developing research activities in VLSI and nanotechnology. He is currently a research professor at the Symbiosis Institute of Technology, Nagpur Campus, Symbiosis International (Deemed University), Pune, India. He is a senior member of the IEEE. He has authored approximately 85 papers in international journals and 50 papers in international conference proceedings. He received the Career Award for Young Teachers (CAYT) from the All-India Council for Technical Education (AICTE), New Delhi, for the period 2012–2014. His research interests include modeling and simulation of HEMTs, device optimization for RF applications, characterization of advanced HEMT architectures, terahertz electronics, high-frequency imaging, sensors, and communication systems. He can be contacted at email: nmkprofessor@gmail.com.



Dr. Ramakrishnan Santhanakrishnan received his Bachelor of Commerce degree from the University of Madras, India, in 2000, his Master of Commerce degree from Annamalai University, India, in 2003, and his Master of Philosophy degree from Alagappa University, India, in 2006. He received his Ph.D. in banking from Manonmaniam Sundaranar University, India, in 2015. He has more than 18 years of teaching experience at various colleges and deemed-to-be universities. His research interests include banking and finance, marketing, social research, and multidisciplinary research. He has published numerous research papers in international journals and conference proceedings and has filed three patents. He can be contacted at email: santhanamkrishnar@gmail.com.



Ramar Vijayalakshmi is an assistant professor in the Department of Computer Science and Engineering at Easwari Engineering College, Ramapuram, Chennai, India. She holds a B.Tech. degree in information technology and an M.E. degree in computer science and engineering. Her research interests include artificial intelligence and machine learning, deep learning, computer vision, and AI-based healthcare applications. Her research focuses on developing intelligent and data-driven solutions to address real-world challenges in healthcare. She is actively involved in teaching, research, and student mentoring, with a particular interest in emerging artificial intelligence techniques for practical healthcare applications. She can be contacted at email: vijayalakshmir.me@gmail.com.



Dr. Subha Sharmini Kannan received her B.E. degree in electrical and electronics engineering from Arunai Engineering College, Thiruvannamalai, India, in 2001 and her M.Tech. degree in power electronics from VIT University, Vellore, India, in 2003. She received her Ph.D. from SRM Institute of Science and Technology (SRM IST), Kattankulathur, India, in 2021 for her research on power electronic interface control strategies for DC nanogrids. She has approximately 23 years of teaching experience and has served as a faculty member at Arunai Engineering College and St. Peter's University. She is currently a faculty member in the Department of Electrical and Electronics Engineering at SRM Institute of Science and Technology, Kattankulathur, India. She has supervised several undergraduate student projects. Her research interests include buoyant windmills, DC nanogrids, control systems, synchronverters, and sustainable energy. She is a fellow of the IEEE, the Institution of Engineers (India), the Indian Society for Technical Education (ISTE), and the Indian Science Congress Association (ISCA). She has published 10 papers in international journals, presented 11 papers at international conferences, and contributed to five book chapters. She has completed more than 15 NPTEL online courses, ranked among the top performers in five courses, and received the NPTEL Superstar recognition. She can be contacted at email: subha.a.star@gmail.com.



Dr. Manepalli Kumudini Padma Lata received her doctoral degree from Andhra University, Visakhapatnam, India. Her research focuses on the intersection of gender, class, community, nationality, and place of residence and their impact on the diverse experiences of women from various social backgrounds in India and abroad. Her research interests include gender studies, diasporic writings, Dalit literature, Indian writing in English, English Romanticism, postcolonial literature, American and Canadian literature, English language teaching (ELT), and soft skills. She can be contacted at email: mkpadmalata@kluniversity.in.



Dr. Rajamanickam Sivaranjani was born in Madurai, Tamil Nadu, India, in 1980. She received her B.E. degree in Electronics and Communication Engineering from Manonmaniam Sundaranar University, Tirunelveli, India, in 2001, and her M.E. degree in Communication Systems from Thiagarajar College of Engineering, Anna University, Chennai, India, in 2005. She received her Ph.D. in image processing from Thiagarajar College of Engineering, Anna University, Chennai, India, in 2020. She has been engaged in teaching since 2001 and is currently a professor in the Department of Electronics and Communication Engineering at Vaigai College of Engineering, Madurai, Tamil Nadu, India. Her research interests include image processing, computer vision, and communication systems. She is actively involved in teaching, research, and academic activities in electronics and communication engineering. She is a life member of the Indian Society for Technical Education (ISTE) and the Institution of Electronics and Telecommunication Engineers (IETE). She can be contacted at email: bharathi_siva21@yahoo.com.



Subbiah Murugan is an adjunct professor at the Saveetha School of Engineering, Saveetha Institute of Medical and Technical Sciences, Chennai, Tamil Nadu, India. He has published research articles in national and international journals and conference proceedings. His research interests include network security and machine learning. He can be contacted at email: smuresjur@gmail.com.