International Journal of Power Electronics and Drive System (IJPEDS)
Vol. 17, No. 4, December 2026, pp. 2630~2643
ISSN: 2088-8694, DOI: 10.11591/ijpeds.v17.i4.pp2630-2643

Development of electrical power meter model equipped with website and Blynk platform dashboard for residential application

Heru Supriyono[1], Aris Budiman[1], Faruq Abdullah Ismail[1], Muhammad Thegar Mustanur Jati[1], Rozita Jailani[2], Ahmad Nor Kasruddin Nasir[3]
[1]Department of Electrical Engineering, Faculty of Engineering, Universitas Muhammadiyah Surakarta, Central Java, Indonesia
[2]Department of Electrical Engineering, Faculty of Engineering, UiTM Mara, Selangor, Malaysia
[3]Department of Electrical Engineering, Faculty of Electrical and Electronic Engineering, University Malaysia Pahang, Pahang, Malaysia

Article Info

Article history:

Received Dec 9, 2025
Revised Sep 22, 2026
Accepted Oct 4, 2026

Keywords:

Electricity meter
Energy management
Energy monitoring
ESP32 microcontroller
Power meter

ABSTRACT

The existing power meter installed in every house by the energy company is not facilitate customers in checking the actual energy consumption, bill, and power quality variables in real time from a distance. The objective of this article is to develop a model of power meter which is equipped with telemonitoring, important power variables, electricity bill, and notification when the voltage and or frequency are outside its operational values to solve the problem of existing power meters. The power meter was developed by using commercial electronic components available in the market involving PZEM 004T sensor, ESP32 microcontroller, LCD, buzzer, Blynk internet of things (IoT) platform, and MySQL database. The test results showed that the developed power meter was able to measure energy consumption, calculate bills, record power variables, and then send them to the web-based dashboard using internet communication, which can be accessed from anywhere. When the voltage value is higher or lower than its operational value, the developed system turns on the buzzer, provides a notification message in LCD and Blynk as well as turning off the power connected to loads automatically to protect them. The developed power meter potentially helps customers in both energy management and safety.

This is an open access article under the CC BY-SA license.

Corresponding Author:

Heru Supriyono
Department of Electrical Engineering, Faculty of Engineering, Universitas Muhammadiyah Surakarta
A. Yani Tromol Pos I, Pabelan, Kartasura, Surakarta, Central Java 57102, Indonesia
Email: Heru.Supriyono@ums.ac.id

1. INTRODUCTION

In Indonesia, electrical energy is provided in alternating current (AC) systems with specifications of 220 V and 50 Hz electricity. In every customer's house, there is a power meter that is used as the main switch through a miniature circuit breaker (MCB) and for recording energy consumption. The power meter installed in the customer is characterized by a power packet subscribed by the customer, stated in volt-ampere (VA) for example 450 VA, 900 VA, 1300 VA, and so on. It will determine the bill tariff of energy consumption per kilowatt-hour (kWh). The energy consumption of the household was recorded continuously in kWh. For postpaid power meters, the energy consumption of every house has to be calculated as the basis of the energy bill that should be paid by the customer. The energy consumption can be calculated as current energy consumption reading subtracted by the previous energy consumption reading. In the existing power meter system, the employee of the energy company has to visit every power meter of the house every month to collect

the current energy consumption data. Then, the energy cost bill for one month can be accessed by the customer using an available mobile application platform or a special payment gateway at shops for payment purposes.

Electrical power quality is a crucial factor in providing electricity to the public. Power that does not meet its technical specification standards, whether higher or lower of its operational specification, can damage equipment. In principle, electrical power quality could be characterized based on its nominal value and waveform, which has been observed and analyzed by researchers such as [1]. From the customer's point of view, practically, the main variables used as indicators of power quality include its voltage and frequency values. The degradation of power quality will have a negative effect for example, on the operation of equipment, leading to destruction and economic loss [2].

The existing power meter installed by the electrical energy company in the customer's house is equipped with a display of current energy consumption, which can only be checked directly on-site. Customers cannot monitor the energy consumption in real-time from a distance for energy and bill management purposes. Also, the power meter does not measure the power quality variables. If the power quality does not meet its technical specification, the customer is not notified and is not able to know it in advance so that cannot make anticipate action to protect home appliances and the energy company is also not notified so that they cannot provide maintenance action for solving the problem. These conditions can lead to inconvenience and economic loss for the customer.

The available information showed that most power quality monitoring was conducted through observations or simulations in laboratories using proper equipment as conducted by researchers. In daily life, voltage and frequency, as indicators of electrical power quality is rarely monitored practically. Because it is not monitored, the risk of equipment damage due to voltage or frequency values that do not meet its technical operational specifications could be high. The voltage and frequency values can be monitored manually by measuring them onsite using a commercial measuring instrument and recording the values. The drawback of this manual monitoring process is that it will be very time consuming to observe them continuously over a long period of time. Telemonitoring of voltage and frequency values together with early warning notification and automatic MCB turn off if these values are outside their operational specification facilitating customers to protect their equipment. Regarding electricity bills, the existing postpaid power meter does not have information on the electricity bill, customers know the bill at the end of the month. The real time energy cost calculation feature will benefit customers in energy consumption and its usage management. Energy usage is very important to monitor since it will provide exact data on the actual energy consumption [3], [4].

Internet of things (IoT) technology allows for continuous, remote monitoring of an object. This is achieved by placing a measuring instrument equipped with a data communication module on the measured object and then sending the measured data to a data center or receiver using internet data communications, where it can then be continuously monitored from anywhere. IoT technology has been proposed in broad area application of energy management systems for example for energy monitoring [5], to prevent electrical energy theft [6], for energy consumption forecasting calculation [7]. The use of IoT technology has advantages such as facilitating electrical energy efficiency and saving energy cost [8], [9].

Currently, based on published works, most electrical energy management systems were proposed for broad energy management, for example in managing grid combinations of more than one electrical source type such as proposed in [10] which also was not covering for household energy consumption monitoring equipped with telemonitoring for energy bill notification of the customer in local currency (Indonesian Rupiah (IDR)) and a central web-based dashboard monitoring system which can be used by the engineer of the energy company for regular monitoring. The absence of the bill notification will not support for the customer to monitor the energy bill for energy management purposes while the absence of the web-based dashboard monitoring will make the engineer team of the energy company cannot get informed when the electrical energy quality is not in the range of the standard values and thus only relying on the report from the customer for monitoring purpose. The development of power meters equipped with telemonitoring features for small-scale applications such as a room, a studio, a flat or a home and integrated to central web-based dashboard of the energy company is still a few.

To overcome the existing research limitations, this article proposes the power meter which is able to display various variables including voltage level, frequency, energy consumption, energy cost in Indonesian Rupiah (IDR) and can be accessed remotely which is also integrated with web-based dashboard to model central web-based monitoring system of the energy company. The system proposed in this article will offer many advantages for customers in practical energy management and safety compared to the existing commercially available power meter or similar system. If the voltage and frequency values of the electrical energy are not met with their operational specification, customers will be notified so that they can take preventive measures to protect their equipment. The power quality variables were also sent to the web-based dashboard of the energy company in real-time so that the engineer team get notified when the power quality is not complying to its standard, hence, the engineer team can provide appropriate countermeasures action as part of quality improvement of its products and services. The objective of this article is to develop a model of

power meter which is equipped with telemonitoring, important power variables, electricity bill, and notification when the voltage and or frequency are outside its operational values. The power meter with telemonitoring features will offer benefits to the customers that both the energy consumption of a house or every home appliance and its quality can be monitored real time which will be useful for energy management and improving safety. Moreover, the proposed monitoring system is also very potential to be integrated to the smart grid system in the future.

2. METHOD

2.1. The block diagram of the developed system

Conceptually, in a house, the developed power meter system is proposed to replace existing power meters installed in the customer house. The position of the developed system in the electricity installation is presented in Figure 1. The single phase 220 V/50 Hz power line will go to loads (home electrical networks) through the developed hardware system. The electrical energy variables including its voltage, current, frequency, and energy consumption were the computed by the developed hardware system and then sent to the developed MySQL database and web-based dashboard of the energy company as well as were sent to the developed Blynk platform of a customer's smartphone for display and notification purposes. The data in the web-based dashboard and Blynk application were then can be accessed by the customer or engineer team. Since the data is recorded and stored in the central database, the proposed monitoring system is potentially to be integrated in the smart grid system in the future. Technically, the general architecture of the developed hardware system is depicted in Figure 2. It can be seen that the electrical energy from 220 V/ 50 Hz power line networks enters the hardware system through a relay which models the MCB of the existing power meter. The PZEM-004T sensor was connected to the power line for sensing voltage, frequency and current. The PZEM-004T sensor sends the data to the ESP32 microcontroller as the main processor that will compute them.

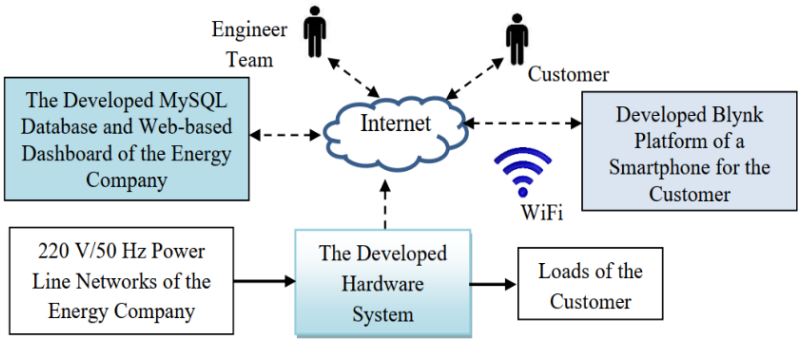

Figure 1. Block diagram represent the general concept of the developed system

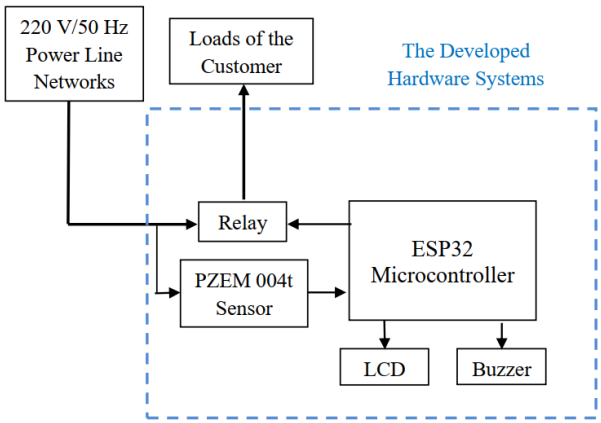

Figure 2. Block diagram representing the general concept of the developed system

The ESP32 microcontroller is a multipurpose component which has been applied in various applications such as movement detection [11], slope detection [12], conditions or variables display [13], robotic control [14], and health monitoring [15]. The use of ESP32 microcontroller has the advantage that it can be connected with the internet through Wi-Fi directly so that the circuit is simpler than when using two microcontrollers such as proposed in [16], [17]. The ESP32 microcontroller then displays the computed electricity variables on the 20×4 LCD I2C, sends them to the Blynk IoT platform and sends them to the MySQL database to be displayed in the website dashboard. The developed system will monitor AC electricity including voltage (V), current (A), power factor (PF), power (W), energy (kWh), frequency (Hz), and provide a conversion of the electricity bill used in IDR. Compared to the system proposed in [4], the developed system uses a newer version of microcontroller and it also measured and stored the energy consumption in kWh and its corresponding bill in IDR. Furthermore, the developed system also is equipped with notification when the voltage or frequency are outside their standard values. Moreover, the developed system also uses Blynk IoT platform for sending notification to the engineer. Blynk IoT platform application is a popular IoT platform which has been used in various applications for example for smartphone-based home appliances remote [18], distance monitoring [19], and home security [20]. The developed system is equipped with a MySQL database to store all measured data which can be accessed online so that it does not need local special memory storage when storing all measured data locally such as proposed in [21], [22]. Besides, the system proposed in [22] needs two microcontrollers compared to the developed system which only use one so that it is more efficient. Moreover, the data stored in a web-based database is more flexible to be used further such as accessing them online by using a website dashboard without any user submission process compared to when using a paid cloud platform for power monitoring system proposed in [23].

The developed power meter system has a warning feature in the form of a warning message displayed in the 20×4 I2C LCD and Blynk IoT platform, as well as the buzzer sound which will be activated when there is an overvoltage or undervoltage condition. The buzzer is very useful for voice-based notification to attract people's attention [24]. In addition, the developed system is also equipped with a telecontrol system in which the relay as a model of MCB can be turned on and off from a distance by using the Blynk IoT application platform. Furthermore, the developed power meter system is equipped with an automatic relay turn-off system in case the voltage is below or over its operational range value. The developed system uses wireless internet communication which is operationally more flexible in transmitting and receiving data both its type and size compared to using any other data communication types such as using LoRaWAN technology proposed in [25] or short message services (SMS) of global system for mobile communication (GSM) networks applied in [26].

2.2. Electronics hardware design

Figure 3 shows a schematic diagram circuit of the developed system. In the schematic diagram, the paths are connected using a label method, making it appear simpler and easier to understand. Once the schematic was drawn correctly, it was converted into a printed circuit board (PCB) layout to arrange the component positions as desired. It can be seen from the figure that the pin RX of the PZEM 004 sensor was connected to pin IO17/TX2 while its TX pin was connected to pin IO16/RX2 of the ESP32 microcontroller. Pin IO15 and pin IO34 of ESP32 microcontroller were connected to the relay and buzzer respectively. Furthermore, the pin IO22/SCL and IO21/SDA of ESP32 microcontroller were connected to the SCL and SDA of the LCD I2C respectively.

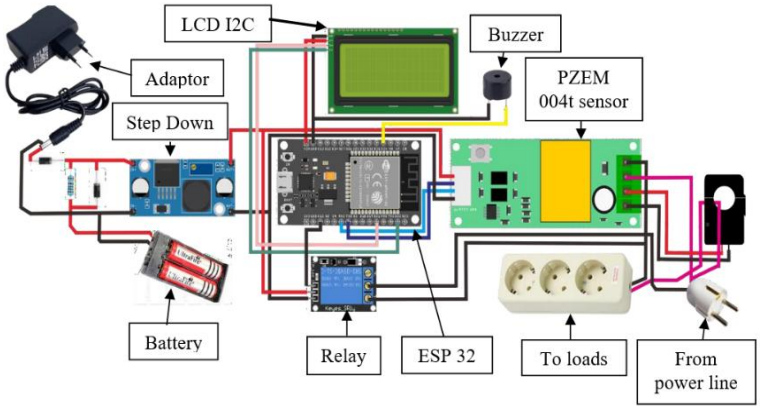

Figure 3. Hardware implementation of the developed power meter system

2.3. PZEM-004T specification

The PZEM-004T sensor used in the developed system is a commercially available component. It can be used for measuring AC electrical energy involving voltage in the range of between 80 and 260 V, current in the range of 0-100 A, active power of between 0 and 23 kW, power factor of between 0 and 1, frequency in the range of 45-65 Hz, and energy consumption of up to 999 kWh. Its measurement inaccuracy is ±0.5% except for power factor where its inaccuracy is ±1%. It is considerably a popular component which has been used in previous works such as in [27], [28].

2.4. ESP32 microcontroller specification

ESP32 microcontroller has a clock speed of 240 MHz. It has random access memory (RAM) of 520 KB with Static RAM (SRAM) technology and internal storage or read only memory (ROM) of 448 KB. It has 34 general-purpose input/output (GPIO) pins which can be used for receiving or transmitting analogue or digital data and for various interfacing purposes. ESP32 microcontroller has integrated wireless data communication module operating on 2.4 GHz frequency band using Wi-Fi with the IEEE 802.11b/g/n standard and Bluetooth 4.2. It is also equipped with an integrated 12-bit analogue-to-digital converter (ADC) and 8-bit digital-to-analogue converter (DAC).

2.5. Power sources for the developed power meter system

The electronic hardware components of the developed power meter system need direct current (DC) power supply. The developed system uses two power supplies, namely from the main power line through a 12 V adapter and two 4.2 V 18650 Lithium batteries connected in series. These two power sources ensure that the developed system will still have power for the electronic hardware components when the main power line is off. These two sources were connected with a rectifier diode circuit so that the two sources do not collide before their voltage was lowered by using the LM2596 DC-DC step down module before entering the electronics component of the system. Both voltage sources will work alternately, namely when normal conditions, the main power line network is on, the developed system uses the input voltage source from the adapter while recharging the battery with a very low current, while when the main power line network is off, the developed system uses the battery as its input voltage source. By using these two power sources combination, the developed system will remain on at least to save the last data read into the ESP32's internal electrically erasable programmable read-only memory (EEPROM) when the main power line network voltage source is off. In the developed system, there is a power outlet which is used as a model of electricity installation of the residential building where loads are connected to. This work is different from the instrumentation for individual energy monitoring for every load as proposed by [29], [30].

2.6. Software design

After the electronics and design stages, the next stage is software design. Mainly, the software is designed for the ESP32 microcontroller to compute data from the PZEM-004T sensor. In addition to programming the microcontroller, programs were also developed for the database and website dashboard as well as the Blynk IoT platform of the smartphone that serves as the user interfaces which will be accessed by users. The general computation step of the ESP32 microcontroller of the developed system can be explained as follows.

In the program, because the developed power meter is proposed to facilitate telemonitoring, first, the ESP32 microcontroller will connect to the available Wi-Fi. The ID of the Wi-Fi was declared in the ESP32 microcontroller program. After that, the ESP32 microcontroller receives data from the PZEM-004T sensor. The computed data are then displayed in LCD, sent to and displayed in the Blynk platform as well as sent to the database and displayed in the website dashboard. Next, the ESP32 microcontroller will check whether the voltage value is outside the normal operational value namely below 197 V or over 232 V. If this condition happens, then ESP32 will turn off relay so that there is no electricity entering to residential installation or loads, turn on the warning buzzer, and send display the warning notification in the LCD and Blynk platform.

In actual condition, the voltage level of the power line networks entering the residential building is usually not always stable at 220 V but it changes up and down all the time. Based on the provider standard, the voltage is still safe if it reaches a maximum value of 220 V+5% or equal to 231 V, and a minimum value of 220 V - 10% or equal to 198 V. The PZEM-004T sensor has a measurement accuracy of 0.5%, so the results of under voltage (197 V) and over voltage (232 V) are included in the estimated accuracy of the sensor measurement. The user will be able to turn on the relay again by using the Blynk platform. The developed system was designed to work continuously round the clock until it is switched off. The program of the ESP32 microcontroller was developed by using Arduino Integrated Development Environment (IDE). The website dashboard and its database were developed using VS Code with HTML, CSS, hypertext preprocessor (PHP), and using phpMyAdmin to a develop MySQL database.

3. RESULTS AND DISCUSSION

3.1. The obtained power meter system model

As in the existing power meter, the hardware circuit was placed in the protective box. As a model, the protective box was made using a plastic box with dimensions of $18.5 \times 11.5 \times 5$ cm. The developed power meter is equipped with a plug-in to the power line to model the connection of the developed power meter to the main power line network. Moreover, the developed power meter is equipped with power outlets to model the electrical installation of the house in which the loads were connected.

Like the existing power meter, its main function is to record the energy consumption of the system. However, the obtained power meter system has advantages compared to the existing power meter in that it records and displays not only the energy consumption in kWh but also the electricity cost in IDR. Besides energy consumption, the developed power meter also displays and records voltage (V), current (I), power factor (PF), power (P), and frequency (F) presented in real time. The monitored data were displayed in three user interfaces, namely the LCD, the Blynk platform (shown in Figure 4), and the website dashboard (shown in Figure 5). For every load, V, I, P, F, PF, E, and energy cost in IDR can be seen on the LCD.

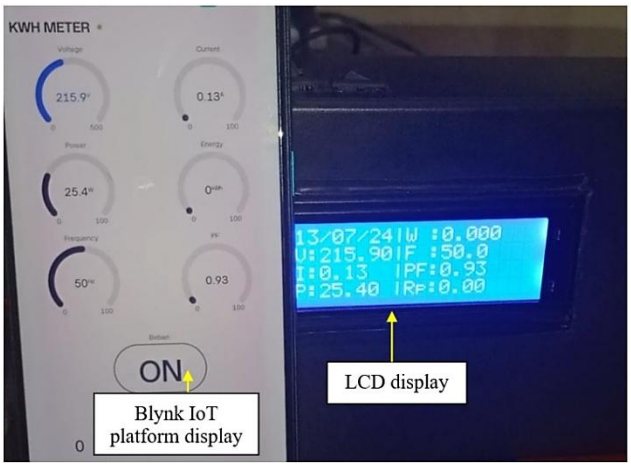

Figure 4. View of Blynk IoT platform developed in Indonesian language compared to the LCD display of the developed monitoring system

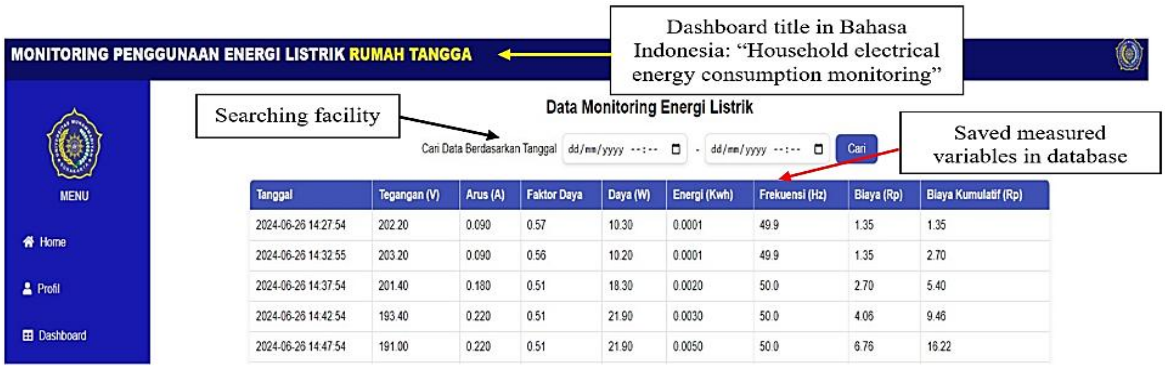

Figure 5. Website dashboard view developed in Indonesian language

The LCD display facilitates customers when they want to check the monitored data directly on-site. The Blynk platform displays monitored data on the smartphone in real time, which is also used for controlling the on/off of the relay. It displays monitored data in both graphical and numerical formats. The website dashboard displays real-time monitoring data as well as all data that has been monitored and stored in the database. There is a data searching menu based on the range of date to display data in the selected date range. The display of the Blynk platform when the voltage is under 197 V or over 232 V is presented in Figure 6. This notification feature allows customers to know the voltage status at their residence online in real time. The electricity bill was calculated using (1) where *B* is the electricity bill in Rupiah (Rp)/IDR, E is

the energy consumption in kWh, and $Tariff\ per\ kWh$ is the electricity tariff paid by customers which is depend on the package subscribed by the customer, for household electricity customers with package of 900 VA the tariff is 1,352.00 IDR per KWH.

$$B = E \times Cost\ per\ KWH \quad (1)$$

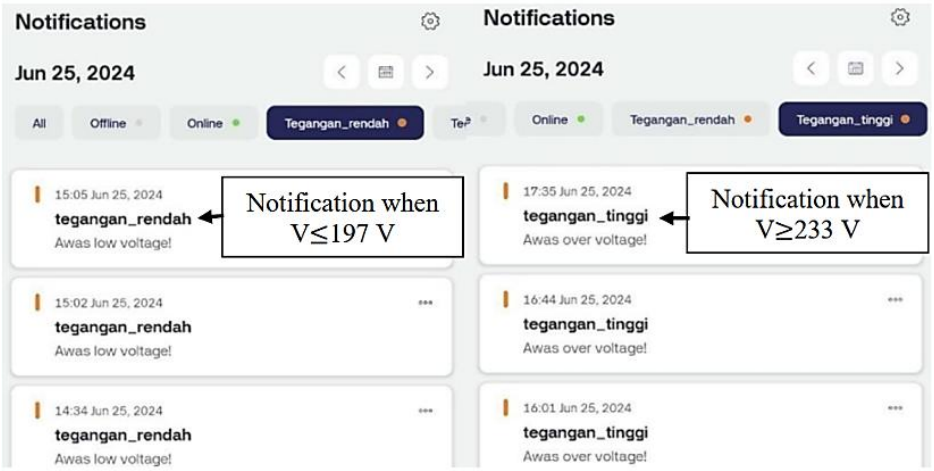

Figure 6. Blynk IoT notification display developed in *Bahasa Indonesia*

3.2. Testing experimentation

Testing was conducted to evaluate whether the developed system was working as expected. There are two test phases: 1) calibration testing and 2) performance testing. The calibration testing was carried out to test whether the measurement results are valid or not by comparing the measurement results using the developed systems to it by using a commercial instrument. The comparison process will result measurement difference (Δ) which also can be seen as the indication of the inaccuracy of the developed system. The test was conducted in a home with electricity power supplied by a state company with a packet subscribing of 900 VA. In the test, there were six home appliances used as loads including fan, iron, rice cooker, lamp, washing machine, and television for the period of 12 hours. The 12 hours period was considered long enough for testing experimentation. Two calibration testing was carried out namely calibration testing for voltage (V) and current (I) measurement and calibration testing for power and energy consumption monitoring. The calibration testing for V dan I measurement was carried out by following steps:

Step 1: Connect a load to the developed systems for a period of 12 hours.

Step 2: Measure and record voltage (V) and current (I) by using the developed system and commercial measuring instrument. The measured data were recorded for every 5 minutes which were then averaged for one hour.

Step 3: Calculate measurement difference between measurement results by using the developed system and commercial instrument by using (2) to (5).

$$\Delta_V = |V_c - V_d| \quad (2)$$

$$\Delta_V(\%) = \frac{\Delta_V}{V_c} \times 100\% \quad (3)$$

$$\Delta_I = |I_c - I_d| \quad (4)$$

$$\Delta_I(\%) = \frac{\Delta_I}{I_c} \times 100\% \quad (5)$$

Where V_c is the voltage measured by using commercial multimeter, V_d is the voltage measured by using developed system, Δ_V is the different of voltage measurement, I_d is the current measured by using developed system, I_c is the current measured by using commercial multimeter, and Δ_I is the different of current measurement.

Step 4: Repeat Step 1-Step 3 for other five loads
Step 5: Calculate the average of V and I values for all 6 loads using (6)

$$Average\ of\ \Delta_{V/I} = \frac{\sum_{n=1}^{N} \Delta_{V/I}}{N} \quad (6)$$

The calibration testing for measuring power (P), energy consumption (E), and the electricity bill calculation in IDR. The power and energy consumption measurement using the developed power meter system was compared to manual calculations based on V, I, and PF values measured by using a commercial instrument. This test was carried out by using six different types of loads in three days with different testing times. The testing steps are as follow:
Step 1: Connect a load individually to the developed systems
Step 2: Measure and record power (P) and energy consumption (E) using the developed power meter system was then compared to manual calculations by using (7) to (10). The measured data were recorded for every 5 minutes which were then averaged for one hour.

$$P_c = V_c \times I_c \times PF \quad (7)$$

$$\Delta_P(\%) = \frac{|P_c - P_d|}{P_c} \times 100\% \quad (8)$$

$$E_c = P_c \times t \quad (9)$$

$$\Delta_E(\%) = \frac{|E_c - E_d|}{E_c} \times 100\% \quad (10)$$

Where P_c is the power calculated based on measurements using a commercial multimeter, P_d is the power measured by using developed system, PF is power factor measured by using the developed power meter, Δ_P is the difference of power measurement, E_d is the power measured by using the developed system, E_c is the power calculated based on measured voltage and current using commercial multimeter, t is the duration of load operated, Δ_E is the difference in energy measurement.
Step 3: Repeat Step 1-Step 3 for other five loads
Step 4: Calculate the average of V and I values for all 6 loads using (11).

$$Average\ of\ \Delta_{P/E} = \frac{\sum_{n=1}^{N} \Delta_{P/E}}{N} \quad (11)$$

After calibration testing, performance testing was then carried out on the developed power meter system to see if it can send the monitoring data to a database and display it on the website dashboard. Moreover, features tested include Blynk notifications, buzzer notification, automatic relay turn-off for under- or overvoltage conditions, and distance relay turn on using Blynk platform.

3.3. Performance of the developed system in the calibration testing of voltage and current measurement

The performance of the developed system was indicated by the Δ_V and Δ_I values for all loads which were calculated by using (2) and (4) respectively. Table 1 showed the measurement differences for all loads measurement testing. It can be seen that the developed power meter system able to measure voltage level stably with results comparable to measurement results by using commercial voltmeter instrument with Δ_V average values are in the range of between 0.05% (for fan as a load) and 0.73% (for washing machine as a load) with overall average of voltage difference measurement Δ_V(%) presented in Table 2 was equal to 0.34%. For current measurement calibration testing, the test results presented in Table 1 showed that the developed power meter was able to measure the current stable with a range value of Δ_I was between 0.24% (for iron as a load) and 46.46% (for television as a load). It can be seen that for four loads, the average Δ_I were between 0.24% (for iron as a load) and 4.63% (for a fan as a load) which can be considered as small and acceptable. However, there were average Δ_I values which were very big for two loads namely 40% and 46.46% for lamp and television, respectively compared to commercial ammeter. Its overall average measurement difference is equal to 15.73%.

Table 1. Calibration testing results of voltage (V) and current (I) measurement for 6 loads

Hour	Δ_V(%)						Δ_I(%)					
	Fan	Iron	Rice cooker	Lamp	Washing machine	Television	Fan	Iron	Rice cooker	Lamp	Washing machine	Television
1	0.05	0.16	0.15	0.62	0.79	0.30	4.58	0.20	0.52	40.00	2.15	46.34
2	0.05	0.17	0.16	0.62	0.81	0.30	4.58	0.20	0.53	40.00	2.27	46.34
3	0.05	0.17	0.15	0.62	0.86	0.32	4.90	0.20	0.51	40.00	1.50	46.34
4	0.05	0.16	0.15	0.62	0.79	0.32	4.58	0.20	0.52	40.00	1.63	46.34
5	0.05	0.16	0.15	0.61	0.79	0.32	4.58	0.20	0.51	40.00	1.77	46.34
6	0.05	0.16	0.15	0.61	0.80	0.32	4.58	0.70	0.51	40.00	1.23	46.34
7	0.05	0.16	0.15	0.61	0.63	0.32	4.58	0.20	0.52	40.00	1.31	46.34
8	0.05	0.16	0.15	0.61	0.69	0.32	4.58	0.20	0.51	40.00	1.23	46.34
9	0.05	0.16	0.15	0.61	0.50	0.31	4.58	0.20	0.51	40.00	2.08	46.34
10	0.05	0.15	0.05	0.61	0.37	0.31	4.90	0.20	0.52	40.00	2.20	52.78
11	0.05	0.16	0.14	0.61	0.95	0.33	4.58	0.20	0.52	40.00	1.94	41.30
12	0.05	0.16	0.14	0.62	0.81	0.29	4.58	0.20	0.81	40.00	2.04	46.34
Average	0.05	0.16	0.14	0.62	0.73	0.31	4.63	0.24	0.54	40.00	1.78	46.46

Table 2. Average measurement difference between the developed monitoring system and a commercial measuring instrument for all loads

Load	Average of Δ_V(%)	Average of Δ_I(%)
Fan	0.5	4.63
Iron	0.16	0.24
Rice cooker	0.14	0.54
Lamp	0.62	40
Washing machine	0.73	1.73
Television	0.31	46.46
Overall average value (%)	0.34	15.73

The values of Δ_V and Δ_I in the measurement were not the same for all loads which could be caused by non-linearity of small current of the PZEM 004t sensor used in the developed system since it has specifications for measuring relatively big current with starting current threshold is equal to 0.02 A (20 mA) and also non-linear characteristics. In the case of current measurement for the lamp as a load, in the experiment light emitting diode (LED)-type lamp was used. It consumed very small current below or around 20 mA which is the lowest readable value of the PZEM 004t sensor. This condition made the current read by the sensor not linear to its actual value. The experiment of current measurement using television as a load also results in a big Δ_I value because of the nonlinearity characteristic of the load. However, because the experiment results showed stability in the measurement it can be concluded that the developed system was acceptable.

3.4. Performance of the developed system in the calibration testing on power (P) and energy consumption (E) measurement

The same as for voltage and current measurement, the performance of the developed system in the calibration testing on power (P) and energy consumption (E) measurement are indicated by the value of Δ_P and Δ_E respectively. The testing results for all six loads are presented in Table 3. It can be seen that the Δ_P values are in the range of 0.25% (for rice cooker as a load) and 2.77% (for fan as a load). The summary presented in Table 4 shows that the overall average of power monitoring difference Δ_P (%) for all 6 loads tested was equal to 1.68% which can be considered as acceptable. For energy consumption monitoring, data presented in Table 3 showed that the average value of Δ_E for six loads are between 0.37% (for lamp as a load) and 9.56% (for Television as a load). The relatively big Δ_E value randomly happening for several measurements for some loads can be caused by the nonlinear characteristics of the PZEM 004t sensor. However, the data confirmed that the Δ_P and Δ_E were stable for all loads and overall average of energy consumption Δ_E for all 6 loads tested presented in Table 4, was equal to 6.73%, which can be viewed as good because it is still below 10% so the system is acceptable.

3.5. Performance of the developed system in warning notification feature test

The purpose of this test is to ensure that the warning notification working as expected when the voltage from the power line network entering the installation of the house is either under or over of its normal operational condition namely in the range of 197 V $< V_{op} <$ 232 V. If the $V_{op} \leq$ 197 V it is considered as undervoltage condition while if the $V_{op} >$ 232 V it is considered as overvoltage condition. Testing results shown in Table 5 shown that when overvoltage or undervoltage happens, the buzzer was turned on, warning notification was displayed in the LCD and Blynk platform, and the relay was turned off automatically to

model the MCB was turned off for protecting loads from broken down. In the test, when the developed power meter system measured a normal voltage condition, the buzzer was turned off, LCD and the Blynk platform displayed measured variable value, and the relay was turned on so that the power outlet was still on ready to be used for loads.

Table 3. Calibration testing results of power (V) and energy consumption (E) measurement for 6 loads

Hour	Δ_P(%)						Δ_E(%)					
	Fan	Iron	Rice cooker	Lamp	Washing machine	Television	Fan	Iron	Rice cooker	Lamp	Washing machine	Television
1	2.38	0.07	0.12	0.58	0.45	3.64	23.08	8.26	15.66	0.00	4.76	16.67
2	3.02	0.05	0.34	0.58	0.61	3.85	21.57	8.40	1.71	0.00	1.45	16.67
3	0.42	0.16	0.16	0.09	0.65	0.35	1.41	0.18	7.04	0.81	4.76	11.76
4	3.43	0.32	0.19	0.71	0.68	2.19	11.76	9.83	4.90	0.00	3.78	14.89
5	4.39	0.32	0.21	0.19	1.06	2.39	4.76	6.19	5.14	0.00	4.40	12.28
6	2.99	0.28	0.22	0.80	0.88	2.27	10.26	6.35	4.61	0.00	0.50	13.04
7	3.21	0.39	0.17	0.06	0.20	1.17	7.10	6.84	2.13	0.00	23.58	1.23
8	3.79	0.05	0.20	0.02	0.38	0.12	3.38	2.48	7.58	0.00	2.80	0.00
9	2.86	0.34	0.11	0.03	0.15	1.44	7.17	3.05	4.72	0.00	16.57	6.54
10	0.79	3.82	0.17	1.11	0.56	0.58	2.46	5.97	0.91	0.00	8.42	5.77
11	3.77	0.38	0.50	2.61	0.30	0.64	4.59	4.52	3.49	0.00	14.90	5.51
12	2.14	0.17	0.58	2.74	0.82	1.77	6.25	4.58	42.57	0.00	8.51	10.34
Average	2.77	0.53	0.25	0.92	0.56	2.03	8.65	5.55	8.37	0.37	7.87	9.56

Table 4. Summary of difference value average for power and energy measured by using developed system and manual calculation

Loads	Average of Δ_P (%)	Average of Δ_E (%)
Fan	2.77	8.65
Iron	0.53	5.55
Rice cooker	0.25	8.37
Lamp	0.92	0.37
Washing machine	0.56	7.87
Television	5.03	9.56
Overall average (%)	1.68	6.73

Table 5. Testing results for warning notification feature

Measured voltage (V)	Status	Indicator			Relay	Power meter status
		Buzzer	LCD	Blynk notification status		
193.40	Under Voltage	ON	Displays warning notification	Sent	OFF	Active
204.70	Normal	OFF	Displays voltage value	No notification	ON	Active
232.30	Over voltage	ON	Displays warning notification	Sent	OFF	Active

3.6. Performance of Blynk platform for controlling the relay against the distance test

The purpose of this test is to ensure that the on/off of the relay can be controlled by using the Blynk IoT application. In addition, this test also aims to determine whether the distance of the developed power meter from the smartphone accessing the Blynk platform and the internet speed of the smartphone used to control the relay using the Blynk IoT application affect its function. This test was conducted with 10 trials with different distance variations in the environment of the Faculty of Engineering, Universitas Muhammadiyah Surakarta at night. Based on the test results shown in Table 6, it can be concluded that the on/off relay control function using the Blynk IoT application can function as expected. The table shows that distance has no significant effect on system responsiveness. Therefore, the developed power meter can be monitored and its relay can be controlled even if the customer travels far from their residence. The internet speed has a slight impact on system responsiveness. Therefore, to ensure high device responsiveness, household electricity customers can prepare an internet connection with a good speed. However, even with poor internet speed, the Blynk IoT application can control the electrical load, but the responsiveness is less than that of a good internet speed.

Table 6. Electrical load control testing with the Blynk IoT platform against the distance

Distance (m)	Internet (kbps)	Load status in Blynk	Actual load status	Response time		Time difference (second)	Status
				Time at the Blynk platform	Time at the load		
1	2.9	OFF	OFF	18:45:44	18:45:44	0	OK
5	3.1	ON	ON	18:47:46	18:47:47	1	OK
10	4.9	OFF	OFF	18:52:51	18:52:52	1	OK
20	2,5	ON	ON	18:57:23	18:57:23	0	OK
50	5.1	OFF	OFF	19:01:41	19:01:42	1	OK
60	2.2	ON	ON	19:05:40	19:05:42	2	OK
70	9.6	OFF	OFF	21:48:00	21:48:01	1	OK
80	1.7	ON	ON	21:50:00	21:50:03	3	OK
90	26	OFF	OFF	22:09:16	22:09:16	0	OK
100	26	ON	ON	22:15:30	22:15:30	0	OK

3.7. Comparison of the developed power meter to existing power meter

Compared to the existing power meter provided by the energy company, the developed power meter system has advantages involving it can calculate the energy consumption in real time without manual calculation, some electrical energy variables continuous monitoring, early warning notification, and automatic relay turning off. The automatic calculation can minimize miscalculation of energy consumption and its related energy cost bill. The website dashboard enables monitoring all data provided for both the energy company and customers in real time which in turn also promotes transparency. The Blynk IoT platform facilitates to notify the engineer of the energy company when the power quality is not complying with the standard so that proper countermeasures can be taken directly without waiting for customer report.

3.8. Comparison of the developed power meter to previous published works

The developed power meter system has uniqueness in the hardware design and its features compared to previous research results. Among its unique features are website dashboard monitoring which could be used for storing all measured data, warning notification when the voltage level is under or over its safe value and then automatic turning off the relay to model automatic MCB turning off to protect the loads of the residential installation from possible damage. The website dashboard has potential for further used for example it can be used for maintenance team of the electricity company to monitor the voltage level of the power line networks entering the customer's house so that the maintenance team knows in advance if the voltage level is not complying with the normal operational standard so that the proper measure can be taken early before it has negative consequence for example any home appliances damage. Moreover, the measured data saved in the database can be used for further analysis and decision making. The warning notification feature benefiting customers to have information on the voltage value if it is outside its normal standard operational value so that it can be used for further action for example to report it to the electricity company.

Technically, the developed system is different from the system proposed in [31] in that the developed system used a dedicated sensor to measure all variables to be computed by the microcontroller while the system developed in [31] computed the pulse from the available energy meter. Also, the developed system uses a dedicated web-based dashboard for energy monitoring intended for all customers in combination with the Blynk IoT platform while the system proposed in [31] uses the Blynk IoT platform only for monitoring in combination with the WhatsApp messaging platform. Finally, the developed system has the feature to turn off the power meter if the voltage is not within its standard value. The developed power meter system model can be enhanced in various aspects involving adding more features for example home area network (HAN) for operational automation, data center for actual conditions in society, adding artificial intelligence (AI) algorithm for further analysis for example to detect pattern change and also for prediction such as used in [32] and for energy management for increasing energy saving in Industry such as proposed in [33].

4. CONCLUSION

In this article we designed a power meter systems model which was equipped with features including power quality variables measurement, internet data communication, web-based dashboard for energy consumption and power quality monitoring, automatic turn-off, Blynk IoT platform monitoring, and notification when the power quality is not complying with its determined standard. The power meter was developed by using commercially available components. It used a relay to model the MCB of the existing power meter provided by the electricity company. The testing results show that all features of the developed power meter involving variable measurement and recording, telemonitoring using Blynk and website

dashboard, warning notification, automatic turn-off, and distance turn-on were working as expected. When the voltage was below 197 V or above 232 V, the developed power meter provided a notification message on the LCD and the Blynk platform, and then the relay was turned on automatically. After being turned off, the relay can be turned on from a distance by using the Blynk platform.

The calibration testing results showed that the overall measurement difference was equal to 0.34% and 15.73% for voltage and current, respectively. Moreover, it can be seen that the overall average of power monitoring difference and energy consumption for all 6 loads used in the test was equal to 1.68% and 6.73%, respectively. Based on these data, it can be concluded that the developed system performance is acceptable. There are limitations needed to be concerned of the developed system including its measurement inaccuracy (the measurement difference to the commercial measuring instrument) was still considered too high, it was only tested on limited loads and time for one house, as well as its security considerations because it uses internet communication in the monitoring process. In the future, more comprehensive testing and analysis are required to address these limitations. The design of the developed power meter can be enhanced in some aspects, for example by improving the dashboard side and adding an intelligent system including AI applications. Moreover, standardizing it with the government body is a further step for improvement of the developed power meter. The successful development of the power meter will potentially benefit people in energy management and the safety of their households.

FUNDING INFORMATION

The authors would like to thank Universitas Muhammadiyah Surakarta, which has provided research funding with the Hibah Integrasi Tridarma (HIT) scheme for the year 2023.

AUTHOR CONTRIBUTIONS STATEMENT

This journal uses the Contributor Roles Taxonomy (CRediT) to recognize individual author contributions, reduce authorship disputes, and facilitate collaboration.

Name of Author	C	M	So	Va	Fo	I	R	D	O	E	Vi	Su	P	Fu
Heru Supriyono	✓	✓	✓	✓	✓	✓		✓	✓	✓			✓	✓
Aris Budiman		✓				✓		✓	✓	✓	✓	✓		
Faruq Abdullah Ismail	✓		✓	✓			✓			✓	✓		✓	
Muhammad Thegar Mustanur Jati	✓		✓	✓			✓			✓	✓		✓	
Rozita Jailani		✓			✓		✓			✓		✓		
Ahmad Nor Kasruddin Nasir		✓		✓		✓			✓		✓			

C : **C**onceptualization
M : **M**ethodology
So : **So**ftware
Va : **Va**lidation
Fo : **Fo**rmal analysis
I : **I**nvestigation
R : **R**esources
D : **D**ata Curation
O : Writing - **O**riginal Draft
E : Writing - Review & **E**diting
Vi : **Vi**sualization
Su : **Su**pervision
P : **P**roject administration
Fu : **Fu**nding acquisition

CONFLICT OF INTEREST STATEMENT

Authors state no conflict of interest.

DATA AVAILABILITY

The authors confirm that the data supporting the findings of this study are available within the article.

REFERENCES

[1] I. Santiago, J. García-Quintero, G. Mengibar-Ariza, D. Trillo-Montero, R. J. Real-Calvo, and M. Gonzalez-Redondo, "Analysis of some power quality parameters at the points of common coupling of photovoltaic plants based on data measured by inverters," *Applied Sciences (Switzerland)*, vol. 12, no. 3, 2022, doi: 10.3390/app12031138.

[2] G. N. Popa, "Issues in power quality," *Energies*, vol. 18, no. 8, 2025, doi: 10.3390/en18081874.

[3] E. Uhlmann, J. Polte, and C. Geisert, "IoT-based energy monitoring in production," *Measurement: Sensors*, vol. 38, 2025, doi: 10.1016/j.measen.2024.101591.

[4] S. E. Himer, M. Ouaissa, M. Ouaissa, M. Krichen, M. Alswailim, and M. Almutiq, "Energy consumption monitoring system based on IoT for residential rooftops," *Computation*, vol. 11, no. 4, 2023, doi: 10.3390/computation11040078.

[5] A. Mohamed, I. Ismail, and M. AlDaraawi, "IoT-driven intelligent energy management: leveraging smart monitoring applications and artificial neural networks (ANN) for sustainable practices," *Computers*, vol. 14, no. 7, 2025, doi: 10.3390/computers14070269.
[6] A. Afridi *et al*., "An efficient and improved model for power theft detection in Pakistan," *Bulletin of Electrical Engineering and Informatics*, vol. 10, no. 4, pp. 1828–1837, Aug. 2021, doi: 10.11591/eei.v10i4.3014.
[7] M. W. Hasan, "Design of an IoT model for forecasting energy consumption of residential buildings based on improved long short-term memory (LSTM)," *Measurement: Energy*, vol. 5, Mar. 2025, doi: 10.1016/j.meaene.2024.100033.
[8] M. Kumar and K. M. Pandey, "The impact of IoT on smart home energy management," *International Journal of Soft Computing and Engineering*, vol. 13, no. 5, pp. 7–12, 2023, doi: 10.35940/ijsce.d3647.13051123.
[9] T. Akhtar, A. U. Rehman, M. Jamil, and S. O. Gilani, "Impact of an energy monitoring system on the energy efficiency of an automobile factory: a case study," *Energies*, vol. 13, no. 10, 2020, doi: 10.3390/en13102577.
[10] M. B. Nasir, A. Hussain, K. A. K. Niazi, and M. Nasir, "An optimal energy management system (EMS) for residential and industrial microgrids," *Energies*, vol. 15, no. 17, 2022, doi: 10.3390/en15176266.
[11] M. R. Prayogi and Tommy, "Design and development of air mouse using ESP32 and MPU6050 sensor," *Journal of Artificial Intelligence and Engineering Applications (JAIEA)*, vol. 4, no. 3, pp. 1678–1686, 2025, doi: 10.59934/jaiea.v4i3.983.
[12] A. Imran, M. Yantahin, A. M. Mappalotteng, and M. Arham, "Development of monitoring tower using gyroscope sensor based on ESP32 microcontroller," *Journal of Applied Engineering and Technological Science*, vol. 4, no. 1, pp. 405–414, 2022, doi: 10.37385/jaets.v4i1.1327.
[13] S. Sarkar, A. Jana, S. Maity, C. Maiti, and C. K. Bera, "IoT-based performance display system using ESP32: design and development," *Journal of Physics: Conference Series*, vol. 2576, no. 1, 2023, doi: 10.1088/1742-6596/2576/1/012002.
[14] S. Gupta, K. Ray, and S. Kaiser, "Self-balancing mobile robot with Bluetooth control: design, implementation, and performance analysis," *Automation*, vol. 6, no. 3, 2025, doi: 10.3390/automation6030042.
[15] M. C. Dinulloh and M. Kusban, "IoT-based COVID-19 symptom detector prototype," *Emitor*, vol. 22, no. 2, pp. 185–193, 2022.
[16] E. H. Saputra, A. Ma'arif, and R. Alayi, "Electricity power monitoring based on Internet of things," *Signal and Image Processing Letters*, vol. 5, no. 1, pp. 31–39, 2023, doi: 10.31763/simple.v5i1.48.
[17] Y. W. M. Yusof, A. H. Mohamed, and M. Kassim, "Energy monitoring system design and analysis with the Internet of things on the Blynk platform," *International Journal of Engineering Trends and Technology*, vol. 71, no. 3, pp. 345–353, 2023, doi: 10.14445/22315381/IJETT-V71I3P236.
[18] A. Winarno, Widodo, and M. K. Nurcahyo, "Smart home remote control system prototype using Internet of things (IoT) based ESP8266 microcontroller," *BEST: Journal of Applied Electrical, Science, & Technology*, vol. 5, no. 2, pp. 29–33, 2023, doi: 10.36456/best.vol5.no2.8063.
[19] L. Wibowo, R. Wahyusari, T. Yuwono, and A. Shofia, "IoT-based high-accuracy monitoring system for on-grid photovoltaic power system using nodemcu esp8266 and pzem004t," *Journal of Mechatronics, Electrical Power, and Vehicular Technology*, vol. 15, no. 2, pp. 230–241, Dec. 2024, doi: 10.55981/j.mev.2024.823.
[20] A. Fikri, "Simple IoT-based home security system using ESP32 and Blynk," *Data Science: Journal of Computing and Applied Informatics*, vol. 9, no. 2, pp. 46–50, Jul. 2025, doi: 10.32734/jocai.v9.i2-22595.
[21] F. Sánchez-Sutil, A. Cano-Ortega, and J. C. Hernández, "Design and implementation of a smart energy meter using a LoRa network in real time," *Electronics (Switzerland)*, vol. 10, no. 24, 2021, doi: 10.3390/electronics10243152.
[22] H. O. Garcés, J. Godoy, G. Riffo, N. F. Sepúlveda, E. Espinosa, and M. A. Ahmed, "Development of an IoT-enabled smart electricity meter for real-time energy monitoring and efficiency," *Electronics (Switzerland)*, vol. 14, no. 6, 2025, doi: 10.3390/electronics14061173.
[23] A. Manowska, A. Wycisk, A. Nowrot, and J. Pielot, "The use of the MQTT protocol in measurement, monitoring and control systems as part of the implementation of energy management systems," *Electronics (Switzerland)*, vol. 12, no. 1, 2023, doi: 10.3390/electronics12010017.
[24] R. A. Chandra, U. Fadlillah, P. Wibowo, F. T. N. Saputra, and R. R. Sulasyono, "Blind people stick tracking using Android smartphone and GPS technology," *Khazanah Informatika : Jurnal Ilmu Komputer dan Informatika*, vol. 8, no. 1, pp. 18–24, 2022, doi: 10.23917/khif.v8i1.15264.
[25] N. E. Guevara, Y. H. Bolaños, J. P. Diago, and J. M. Segura, "Development of a low-cost IoT system based on LoRaWAN for monitoring variables related to electrical energy consumption in low voltage networks," *HardwareX*, vol. 12, Oct. 2022, doi: 10.1016/j.ohx.2022.e00330.
[26] H. Msimbe, D. Wilson, J. Salim, F. Rwegoshora, D. R. Sinde, and P. M. Kisangiri, "Development of IoT-based system for monitoring electrical energy consumption of the smart and rental houses in Tanzania," *International Journal of Advances in Scientific Research and Engineering*, vol. 08, no. 08, pp. 01–10, 2022, doi: 10.31695/ijasre.2022.8.8.1.
[27] R. A. Susilo, A. A. Suroso, E. Ramadhan, B. Cahya Ningrum, and M. Masing, "Design and construction of thermal overload relay (siemens 3ua50) based on Arduino Uno," *International Journal of Current Science Research and Review*, vol. 07, no. 09, Sep. 2024, doi: 10.47191/ijcsrr/V7-i9-44.
[28] Hartoyo, S. Rosyadi, U. Nursusanto, and R. Amin, "Electrical power monitoring system for solar power plants based on the internet of things," *Sustinere: Journal of Environment and Sustainability*, vol. 8, no. 3, pp. 397–407, 2024, doi: 10.22515/sustinere.jes.v8i3.442.
[29] S. M. Aashik, P. Jayarama, N. S. Abishlal, T. Abinayaa Sri, and A. J. Benedict, "Smart energy management and load monitoring of individual loads," in *E3S Web of Conferences*, 2023, doi: 10.1051/e3sconf/202340502013.
[30] I. B. Dhaou, "Design and implementation of an internet-of-things-enabled smart meter and smart plug for home-energy-management system," *Electronics (Switzerland)*, vol. 12, no. 19, 2023, doi: 10.3390/electronics12194041.
[31] H. J. El-Khozondar *et al.*, "A smart energy monitoring system using ESP32 microcontroller," *e-Prime - Advances in Electrical Engineering, Electronics and Energy*, vol. 9, p. 100666, 2024, doi: 10.1016/j.prime.2024.100666.
[32] M. Wigger, P. Burggräf, F. Steinberg, A. Becher, and B. Heinbach, "Integrating artificial intelligence into energy management: a case study on energy consumption data analysis and forecasting in a German manufacturing company," *Energy and AI*, vol. 21, p. 100576, 2025, doi: 10.1016/j.egyai.2025.100576.
[33] D. P. Panagoulias, E. Sarmas, V. Marinakis, M. Virvou, G. A. Tsihrintzis, and H. Doukas, "Intelligent decision support for energy management: a methodology for tailored explainability of artificial intelligence analytics," *Electronics (Switzerland)*, vol. 12, no. 21, p. 4430, 2023, doi: 10.3390/electronics12214430.
[33] Z. L. Fu, C. Cao, and F. Gao, "Impact of artificial intelligence energy management technologies on commercial multi-energy consumption," *Energy*, vol. 340, 2025, doi: 10.1016/j.energy.2025.139247.

BIOGRAPHIES OF AUTHORS



Heru Supriyono is a full-time lecturer at the Department of Electrical Engineering, Universitas Muhammadiyah Surakarta, Indonesia. His research interests include the development of computer-related applications for broad areas of instrumentation, measurement, monitoring, and control. He can be contacted at email: heru.supriyono@ums.ac.id.



Aris Budiman is a full-time lecturer at the Department of Electrical Engineering, Universitas Muhammadiyah Surakarta, Indonesia. His research interests are in energy management, power quality, power generation, transmission, and distribution. He can be contacted at email: aris.budiman@ums.ac.id.



Faruq Abdullah Ismail is a full-time undergraduate student at the Department of Electrical Engineering, Universitas Muhammadiyah Surakarta, Indonesia. His interests include developing electrical systems and instrumentation for various applications. He can be contacted at email: faruqaismail002@gmail.com.



Muhammad Thegar Mustanur Jati is a full-time undergraduate student at the Department of Electrical Engineering, Universitas Muhammadiyah Surakarta, Indonesia. His interests include developing electrical systems and instrumentation for various applications. He can be contacted at email: thegarmj@gmail.com.



Rozita Jailani is a full-time lecturer at the Department of Electrical Engineering, Faculty of Engineering, UiTM Mara, Selangor, Malaysia. Her research interests include intelligent control systems, rehabilitation engineering, instrumentation, and artificial intelligence. She can be contacted at email: rozitaj@uitm.edu.my.



Ahmad Nor Kasruddin Nasir is a full-time lecturer at the Department of Electrical Engineering, Faculty of Electrical and Electronic Engineering, University Malaysia Pahang, Pahang, Malaysia. His research interests include soft computing, instrumentation, control systems, and modelling of system dynamics. He can be contacted at email: kasruddin@ump.edu.my.