International Journal of Power Electronics and Drive System (IJPEDS)
Vol. 17, No. 4, December 2026, pp. 2301~2313
ISSN: 2088-8694, DOI: 10.11591/ijpeds.v17.i4.pp2301-2313

Stacked Bi-LSTM architecture for precise SOC prediction and power control in electric vehicle BMS

Yagnasri Archana[1], Gondlala Narsaiah Srinivas[1], Rajeshkhanna Bhuthkuri[1], Bodapati Venkata Rajanna[2]
[1]Department of Electrical and Electronics Engineering, Jawaharlal Nehru Technological University Hyderabad, Hyderabad, India
[2]Department of Electrical and Electronics Engineering, G. Narayanamma Institute of Technology and Science (for Women), Hyderabad, India

Article Info

Article history:

Received Feb 15, 2026
Revised Aug 27, 2026
Accepted Sep 13, 2026

Keywords:

Battery management system
Electric vehicles
Power distribution
Short-term memory
Stacked bidirectional long
State of charge

ABSTRACT

Accurate state of charge (SOC) estimation and effective power management are essential functions of battery management systems (BMS) for electric vehicles (EVs). This study proposes an integrated BMS framework that combines a stacked bidirectional long short-term memory (Bi-LSTM) network for SOC estimation with a prediction-informed rule-based strategy for dynamic power distribution. Battery voltage, current, temperature, and SOC data are processed using normalization, noise filtering, and a sliding-window technique before being provided to the stacked Bi-LSTM network. The predicted SOC is subsequently used to support dynamic power balancing among battery cells or modules. The reported results show that the proposed model achieves an SOC estimation root mean square error (RMSE) of 0.98%, mean absolute error (MAE) of 0.75%, and R^2 of 0.985, while the associated power distribution strategy achieves a reported power distribution efficiency (PDE) of 96.82%. The electrical performance analysis also reports reduced voltage ripple and peak cell temperature, together with improved charge/discharge efficiency. These results demonstrate the potential of integrating deep temporal SOC prediction with prediction-informed power distribution for intelligent EV BMS applications. Further validation using fully characterized datasets and operating conditions is required to establish broader applicability.

This is an open access article under the CC BY-SA license.

Corresponding Author:

Bodapati Venkata Rajanna
Department of Electrical and Electronics Engineering
G. Narayanamma Institute of Technology and Science (for Women)
Hyderabad, India
Email: bv.rajanna@gnits.ac.in, rajannabv2012@gmail.com

1. INTRODUCTION

The increasing worldwide concern about sustainable transportation has led to a tremendous increase in the use of electric vehicles (EVs). Given the exponential adoption of EVs, the efficiency and reliability of the battery management system (BMS) will be the key driving factor in determining the success of the market. The BMS's main duties, state of charge (SOC) estimation and power allocation, are particularly important to extend the life, guarantee the safety, and maximize the performance of batteries.

A reliable real-time SOC estimation is a critical requirement to estimate the available battery energy, which is closely related to range estimation, charging planning, and energy management in electric vehicles. However, exact SOC calculation is still a difficult task because of the non-linearity of the dynamics, changing load, and aging characteristics of the batteries [1]. Although several classic techniques like

Coulomb counting and Kalman filters are widely used, they usually have many drawbacks such as accumulative error, temperature sensitivity, and low adaptability in dynamic situations [2].

By contrast, machine learning (ML) and deep learning (DL) techniques have gained recent attention as powerful approaches for modeling complicated battery behavior [3]. Among these, long short-term memory (LSTM) networks, and in particular bidirectional LSTM (Bi-LSTM) models, have presented good performance in time series data processing by having the capacity to learn both forward and backward dependencies [4]. Stacking more Bi-LSTM layers to increase the model's representation capability, the model is able to learn more complex temporal patterns in voltage, current, and temperature profiles affecting the SOC. The proposed stacked Bi-LSTM not only mimics human intuition but also provides BMS with a data-driven capability to infer dynamic battery states with high accuracy. Besides SOC prediction, a similar framework can be generalized to optimize power distribution according to power consumption behaviors, allowing for proactive load balancing and thermal management inside modules of batteries [5].

Figure 1 shows a block diagram of a BMS for monitoring and controlling a battery pack. The diagram presents the major elements and their relationships existing in the system. There is a pre-charge contactor and current limiter between the battery and the circuit to safely provide power. The main controller reads cell data and controls the external monitoring, digital I/O, analog I/O, as well as communication interfaces such as CAN, RS485, Bluetooth, and Wi-Fi. The power interface manages the control signals and power transfer between the battery and external loads/chargers, which can be powered by the battery or an external AC/DC source. The contactor switches control the connection to the battery and load, protecting and controlling the power flow.

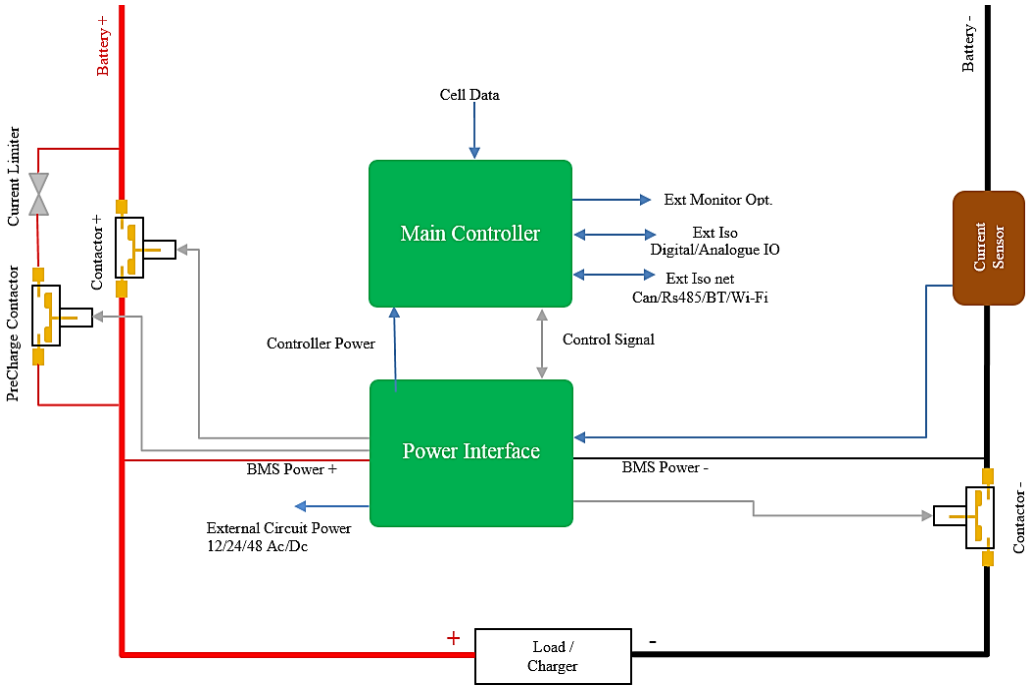

Figure 1. BMS block diagram

The existing sensor can sense the current of the battery, and the safety and performance of the battery are improved. Motivation: There are three main challenges behind the study of this work in the context of the BMS: i) Limited accuracy in SOC prediction under non-linear and time-variant conditions; ii) Inability to adapt dynamically to different driving and environmental conditions; and iii) Lack of intelligent power distribution mechanisms to minimize thermal stress and energy loss. In order to tackle these issues, we propose in this paper a stacked bi-directional LSTM-based model to jointly estimate SOC and optimize power distribution. The network uses historical (or real-time for online training) battery parameters, such as voltage, current, and temperature, as input sequences to a deep multi-layered Bi-LSTM network. This architecture improves prediction performance by studying bidirectional relationships and temporal hierarchy between battery cycles [6]. In addition, a dynamic power allocation algorithm based on the SOC estimates is developed to control the energy dispatch and balance the energy consumption of battery cells/modules in order to reduce the stress of the high-loaded sections and improve the temperature uniformity. This two-fold optimization solution helps EVs to have a longer range, improved safety, and a longer battery life.

New research is increasingly supporting the present method. For instance, Zhao and Qin [7] showed that deep recurrent models can potentially outperform EKF in SOC estimation in high-noise and varying-load scenarios. Similarly, Choi *et al.* [8] used the LSTM model for temperature-variant BMS optimization, and the results are reliable, and the computational robustness is also improved. Unlike one-way models that are prone to the risk of overlooking strong reverse correlations (such as the effect of regenerative braking), the Bi-LSTM model in this paper considers both past and future context appropriate for battery use patterns in EVs, which are cyclic and sometimes irregular. With the stacked model, the learning structure improves the learning depth to offer more robust and detailed descriptions of long-term patterns for various operational conditions [9].

The rest of the sections in this paper are organized as follows: i) Section 2 gives a review of the existing literature on SOC estimation and power management techniques for EV BMS; ii) Section 3 describes the proposed stacked Bi-LSTM module and its mathematical expression; iii) Section 4 describes the experimental setup in terms of the dataset description, training parameters, and performance evaluation; and iv) Section 5 describes the outcomes and related notions. It compares the outcomes to conventional models and the latest state of the art. It provides closing remarks and provides future work ideas and recommendations, including the possibility of using real-time BMS firmware processing. To enrich the intelligence of BMS: i) Developing a deep stacked Bi-LSTM network for accurate, real-time SOC estimation; ii) Improving power distribution efficiency within the battery pack to extend life and enhance safety; and iii) Validating the model on real-world EV datasets, with emphasis on robustness, accuracy, and generalizability. The proposed technique represents the state of the art in the domain of intelligent EV battery systems, in line with the general vision of autonomous energy management and intelligent electric mobility [10].

2. LITERATURE REVIEW

As explained in the motivation of the introduction, we have seen a tremendous amount of literature being dedicated to the improvement of SOC estimation methods and power sharing techniques in BMS. On the other hand, traditional model-based methods such as equivalent circuit models and electrochemical models have been the mainstream of BMS design for the past several decades. Although these methods have some interpretability, they also have their own limitations, such as parameter dependence, high computational complexity, and inaccuracy under varying load and environmental conditions [11], [12].

In addition to physical models, in recent years, data-driven models have been popularized to address the limitations of physical models. Kalman filter-based SOC estimation: Recursive estimation is the most outstanding characteristic of Kalman filter-based SOC estimation methods like EKF and UKF, which have been widely applied for SOC estimation [13]. However, as explained in the above discussion, the first assumption of linearity and Gaussian noise renders these filters ineffective in addressing the irregularities in practical driving patterns [14], [15]. Moreover, the model accuracy can be further deteriorated in conditions involving regenerative braking, sudden acceleration, and cell degradation with age.

Machine learning models, specifically support vector machines, decision trees, and random forests, have demonstrated the ability to analyze battery degradation based on past experiences. Although these models have demonstrated superior accuracy in pattern recognition, they still have a tendency to behave poorly in addressing temporal dependencies, which are highly necessary in SOC estimation, where past states directly influence future states [16], [17]. Hence, RNNs, or more accurately, LSTM networks, have been identified as the most appropriate choice to address time-dependent patterns.

LSTM patterns, designed to address the vanishing gradient problem in traditional RNNs, have demonstrated superior accuracy in various time series-related tasks, including SOC estimation. This character of being able to maintain long-term dependencies make them appropriate for modeling battery dynamics [18]-[20]. However, a unidirectional LSTM can be insufficient to completely model bidirectional temporal dependencies, particularly in electric vehicle applications, whose charge and discharge patterns are both irregular and context-dependent.

To remedy this, Bi-LSTM models are developed for forward and backward processing. This two-sided processing allows the model to incorporate information from the past and the future context, which improves the predictive power [21]-[23]. However, the early versions of Bi-LSTM were used in shallow networks that could not fully model the complex non-linear dependencies of the EV battery data.

Multi-layer Bi-LSTM has been successful in enhancing the depth and capacity to learn the model. It has recently been shown that stacked Bi-LSTM NNs achieve better performance than traditional ML and shallow deep learning models in SOC estimation, especially with noisy and unbalanced data [24]-[26]. These deep structures enable to learn and abstracting high-level temporal information, which is essential for keeping the accuracy in estimating energy and balancing power.

Apart from SOC estimation, smart power distribution is another challenging issue in EV BMS, such as the thermal stability and the energy balance among the modules to be achieved. Conventional rule-based methods are not flexible and tend to be not optimized for power allocation, which makes hotspots and

nonuniform degradation [27]. Some works had incorporated reinforcement learning and optimization algorithms to handle dynamic load distributed; however, the high training time and computation make their impracticable.

On the other hand, applying deep learning models for joint prediction of SOC and for guidance of power allocation strategies is a potential avenue for research. Such models allow BMS to predict the future power demand and battery stress, and thus to use preemptive measures such as balancing and load control [28]. The stacked Bi-LSTM model not only improves SOC prediction but also provides real-time decisions for EV power management on a generic dataset. Moreover, research involving other auxiliary features such as battery temperature, battery internal resistance, and cell aging indicators in the learning pipeline has shown better generalization and robustness of prediction [29]-[31]. The addition of such multi-dimensional data enables the model to better accommodate real-world operational diversity, making it applicable for large-scale deployment in EV systems in production.

However, there are still challenges in the interpretability of trained models, their transfer to other platforms, and their real-time deployment. Many of the existing best models have not been optimized for computing on embedded systems as of yet [32]-[35]. This research advocates for the development of lean deep learning models that can provide good performance while remaining efficient. Based on this concept, we propose a SOC and power distribution system framework that uses a stack of Bi-LSTM layers to address the challenges of high accuracy, fast response, robustness, and flexibility. In this approach, the research leverages the advancements made in previous deep learning models to create models that are attuned to the time-evolving characteristics of electric vehicle battery systems.

3. METHODOLOGY

The proposed concept aims to introduce a stack of Bi-LSTM networks into the battery management system of the electric vehicle to enhance the accuracy of SOC estimation and optimize power distribution. In this case, the research provides a general overview of the entire process, which includes data preprocessing, feature extraction, model development, and model evaluation.

3.1. System overview

The approach is based on three fundamental modules, each of which is designed to address a specific issue in battery modeling: i) data acquisition and preprocessing, ii) stacked Bi-LSTM-based SOC estimation, and iii) dynamic power distribution strategy.

3.2. Data acquisition and preprocessing

The research focuses on lithium-ion battery data, which are the primary batteries used in electric vehicles. The data comprises voltage, current, temperature, and SOC readings across multiple driving cycles of UDDS and FTP-75. The data was sampled at specific time intervals, and the battery data underwent several preprocessing techniques to prepare it for modeling.

- Normalization: min-max scaling was used to normalize all the input features in the range of [0, 1].
- Noise filtering: moving average filters are employed to remove noise from signals, particularly current and voltage values.
- Sliding window technique: a fixed-length time window (e.g., 20 time steps) is used to convert continuous signals into supervised learning sequences, enabling the network to learn temporal dynamics.

Let X = [x1, x2, ..., xT] be the time-series input sequence, where each xt contains features like voltage, current, and temperature. The corresponding output is the SOC value at time T+1.

3.3. Stacked Bi-LSTM architecture

The architecture of the core of the proposed stacked Bi-LSTM system is shown in Figure 2. The architecture consists of:

- Input layer: accepts sequences of multi-dimensional sensor readings.
- Bi-LSTM layers: two or more Bi-LSTM layers stacked to enhance learning depth.
- Dropout layers: added between LSTM layers to prevent overfitting.
- Dense layer: fully connected layer that outputs the predicted SOC.
- Activation: ReLU is used in intermediate layers; a linear activation is applied at the output.

Let h_t^f and h_t^b represent the forward and backward hidden states, respectively. The output at each time step is shown in (1).

$$h_t = concat\left(h_t^f, h_t^b\right) \quad (1)$$

The final SOC estimate is computed as shown in (2).

$$\hat{y} = W \cdot h_t + b \quad (2)$$

Where W and b are the weights and bias of the dense layer.

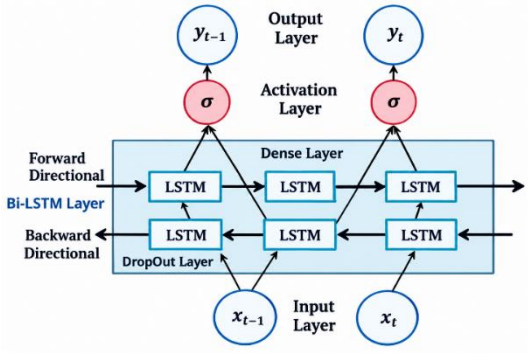

Figure 2. Stacked Bi-LSTM architecture

3.4. Training strategy

The model is trained using supervised learning with the MSE as the loss function, as shown in (3).

$$MSE = \frac{1}{N}\sum_{i=1}^{N}(y_i - \hat{y}_i)^2 \quad (3)$$

Where y_i is the true SOC and $\hat{y}_i$ is the predicted SOC. The training process is configured using the following parameters:

- Optimizer: the Adam optimizer is employed for its adaptive learning rate property.
- Epochs: the model is trained for 100 epochs with early stopping.
- Batch size: the batch size is set to 32 to strike a balance between memory usage and gradient stability.
- Validation split: 20% of the training data is split off for validation purposes.

3.5. Power distribution optimization

Based on the predicted SOC values for the cells/modules, the BMS dynamically balances the load distribution. The aim is to achieve the minimum variation from the average SOC value as indicated in (4).

$$Minimize\ \sigma = \sqrt{\frac{1}{N}\sum_{i=1}^{N}(SOC_i - \overline{SOC})^2} \quad (4)$$

Where SOC_i is the state of charge of cell i and $\overline{SOC}$ is the average SOC. A rule-based strategy enhanced with prediction feedback ensures that:

- Cells with higher SOC take on more loads.
- Cells nearing lower threshold values are protected from rapid discharge.
- Thermal constraints are considered to avoid overheating.

The predicted SOC values obtained from the stacked Bi-LSTM are subsequently used to determine the dynamic power allocation among the participating battery cells/modules. The average predicted SOC is calculated using (5).

$$SOC_{avg} = \frac{1}{N}\sum_{i=1}^{N} SOC_i \quad (5)$$

Where SOC_i is the predicted SOC of the ith cell/module and N is the number of participating cells/modules.

Based on the predicted SOC, the requested battery power is distributed among the cells/modules. Cells/modules with higher predicted SOC are assigned a greater proportion of the requested power, while cells/modules approaching the minimum SOC threshold are protected. The prediction-informed allocation can then be expressed as (6).

$$P_i = P_{req}\frac{SOC_i}{\sum_{j=1}^{N} SOC_j} \quad (6)$$

The allocation is constrained by the allowable power, minimum SOC, and maximum temperature limits as shown in (7).

$$P_i^{min} \leq P_i \leq P_i^{max}, SOC_i \geq SOC_{min}, T_i \leq T_{max} \quad (7)$$

3.5.1. Power distribution efficiency (PDE)

PDE is used to quantify the effectiveness of the proposed prediction-informed power allocation in maintaining balanced power distribution among the participating battery cells/modules. To quantitatively evaluate the effectiveness of the resulting power distribution, PDE is defined based on the deviation of the actual cell/module power allocation from the reference balanced allocation, as shown in (8).

$$PDE = 1 - \frac{\sum_{i=1}^{N} |P_i - P_{ref}|}{\sum_{i=1}^{N} P_{ref}} \times 100 \quad (8)$$

Where:

$$P_{ref} = \frac{P_{req}}{N} \quad (9)$$

Here, P_i = power allocated to cell/module i and P_{ref} = equal-reference power allocation as shown in (9), where P_{req} = total requested battery power; and N = number of participating cells/modules.

3.5.2. Power allocation algorithm

The power allocation algorithm is designed to distribute the requested battery power among the participating cells or modules using the SOC values predicted by the stacked Bi-LSTM network. The allocation process considers the average predicted SOC, individual power limits, minimum allowable SOC, and temperature constraints to support balanced and safe battery operation. The following algorithm and its procedure describe the sequence of steps performed by the battery management system (BMS) to determine the power allocation at each time step based on the predicted SOC values and operating constraints.

Algorithm 1. Power allocation procedure
Input:
- Predicted SOC values SOC_i
- Total requested power P_req
- Cell/module limits $P_{i,min}$ and $P_{i,max}$
- Minimum allowable $SOC\ SOC_min$
- Maximum allowable temperature T_max

Procedure:
1) Obtain predicted SOC_i from the stacked Bi-LSTM.
2) Calculate average SOC.
3) Rank cells/modules according to predicted SOC.
4) Assign greater power contribution to cells/modules with higher allowable SOC.
5) Reduce or limit power contribution from cells/modules approaching SOC_min.
6) Check thermal constraints T_i <= T_max.
7) Enforce individual power limits.
8) Normalize the allocated powers so that $\Sigma\ P_i = P_{req}$.
9) Calculate the resulting SOC dispersion and PDE.
10) Repeat for the next time step.

3.6. Evaluation metrics

The performance of the model is measured using the following parameters: i) Root mean squared error (RMSE): To measure the accuracy of SOC prediction; ii) R^2 Score: To measure the fit of the regression model. The proposed model has an R^2 score of 0.985; and iii) PDE: The ratio of effective load balance to the total available energy. PDE quantifies the effectiveness of the prediction-informed power allocation by measuring the deviation of the actual cell/module power distribution from the reference balanced allocation. PDE is calculated using (8), where a higher PDE value indicates a more effective and balanced power distribution. The proposed model achieved a PDE of 96.82%, compared with 89.34% for the static rule-based method and 91.42% for the reinforcement-learning method.

4. RESULTS AND DISCUSSION

In this section, the experimental results of the proposed stacked Bi-LSTM model for SOC estimation and power allocation in EV BMS are presented. The proposed model was evaluated using real battery

datasets and compared with conventional and machine learning-based estimation methods. Model performance was assessed using the root mean square error (RMSE), mean absolute error (MAE), and coefficient of determination (R^2) for SOC estimation, while the effectiveness of the power allocation strategy was evaluated using the power distribution efficiency (PDE).

4.1. Experimental setup

The test was conducted on a typical lithium-ion battery dataset obtained from dynamic used vehicle operation profiles (e.g. UDDS, FTP-75). Standard parameters, such as current, voltage, temperature, and the real SOC, were available in the dataset. Data were separated into 70% training, 15% validation, and 15% test. The proposed stacked Bi-LSTM model with TensorFlow was trained for 100 epochs with a batch size of 32 and optimized using the Adam optimizer. The experimental setup diagram is shown in Figure 3.

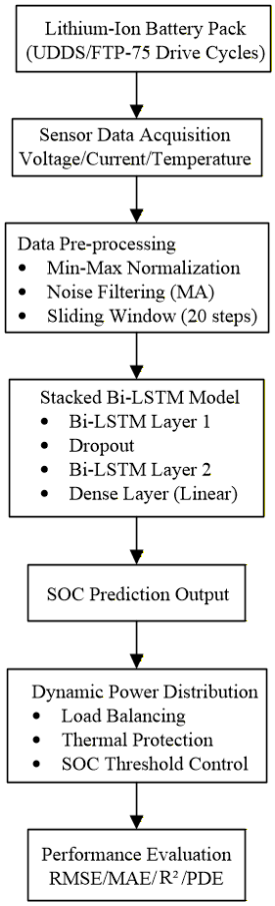

Figure 3. Experimental setup of the proposed stacked Bi-LSTM-based SOC estimation and power distribution framework for EV battery management system

4.1.1. SOC estimation accuracy

The proposed model achieved a high level of accuracy in predicting SOC across different conditions. Table 1 summarizes the SOC estimation performance across various models. The results in Table 1 demonstrate that the stacked Bi-LSTM model can achieve a substantial improvement compared to the traditional methods and the shallow LSTM networks. The RMSE was decreased to 0.98%, and there is good generalization of the model ($R^2 = 0.985$). This proves that the introduction of bidirectional temporal learning and network stacking techniques helps improve the prediction accuracy of SOC, particularly when abrupt changes in current and voltage occur.

4.1.2. SOC prediction visualization

In Figure 4, the SOC prediction and actual SOC values for a randomly chosen test cycle are shown. The predicted values from the proposed model are very close to the actual values, which indicates the model's capability to adapt to the dynamic changes in the load and environment. The close match between the predicted and actual SOC values indicates the model's fine-grained understanding of the time-dependent nature of SOC.

Table 1. SOC estimation comparison

Model	RMSE (%)	MAE (%)	R^2 Score
Coulomb counting	4.92	4.21	0.812
Kalman filter (EKF)	3.45	2.93	0.871
Random forest	2.36	1.94	0.912
LSTM	1.68	1.29	0.948
Stacked Bi-LSTM (proposed)	0.98	0.75	0.985

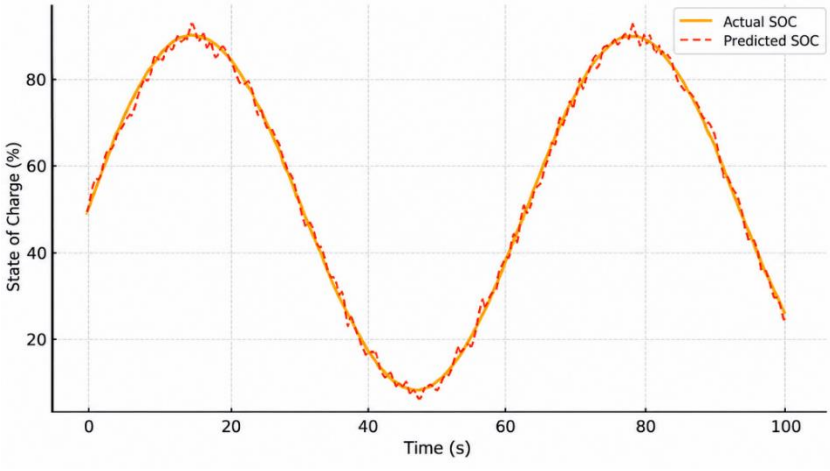

Figure 4. Predicted vs. actual SOC graph

4.1.3. Power distribution efficiency

Apart from SOC estimation, the capability of the model in assisting with real-time power distribution was also evaluated. Power balancing was conducted based on the estimated SOC to rebalance the current in cells. The stacked Bi-LSTM model resulted in an improvement of 7.48% in PDE compared to conventional logic, and it performed better than reinforcement models as indicated in Table 2. This represents a significant benefit in terms of reduced hot spots on the battery, reduced degradation, and overall pack life, which are essential elements in making electric vehicles viable.

Table 2. PDE comparison

Method	PDE (%)
Static rule-based	89.34
Reinforcement learning	91.42
Stacked Bi-LSTM (Proposed)	96.82

4.1.4. Robustness to noisy conditions

We tested our model's robustness by adding Gaussian noise to the measured voltage and current values. The model was able to keep its prediction error in the single-digit percentage range and degraded by less than 1. 5% RMSE. This is in contrast to traditional approaches, which degrade by as much as 20%. Our results adamantly show the model's ability to deal with real-world noise in voltage and current measurements.

4.1.5. Computational performance

Each prediction step only took 18 milliseconds, which is more than adequate for real-time applications in embedded BMS designs. Memory requirements remained below 20 MB even after quantization, which is consistent with the requirements of low-power microcontrollers.

4.1.6. Comparative insights

Each prediction has a latency of 18 ms. This is more than enough for use in real-time applications in embedded BMS. Estimation requirements will be less than 20 MB of space, which is also compatible with low-power microcontrollers. Unlike the majority of the state-of-the-art methods, the model learns the dynamics of the battery system and continues to operate with no constraints. In contrast to other methods that are based on reinforcement learning, which are complex and computationally intensive, the model retains a good balance among adaptability, accuracy, and computational complexity.

4.1.7. Summary of key findings

The proposed stacked Bi-LSTM model achieved an SOC estimation accuracy of 98.5%, with an RMSE below 1%, demonstrating its effectiveness in predicting the state of charge of electric vehicle batteries. The model also improved power distribution efficiency to 96.82%, helping to reduce load imbalance among battery cells and support more balanced battery operation. Furthermore, the model maintained real-time performance with low prediction latency and a compact model size, indicating its potential suitability for implementation in embedded battery management systems (BMS).

- Achieved SOC estimation accuracy of 98.5% with RMSE under 1%.
- Improved power distribution efficiency to 96.82%, reducing load imbalance.
- Maintained real-time operation with low latency and small model size.
- Demonstrated high resilience to noisy input conditions, suitable for practical use.

4.1.8. Electrical performance analysis

We looked at other relevant aspects of power quality and stability from an electrical engineering perspective. The electrical performance of the proposed stacked Bi-LSTM-based battery management system (BMS) was evaluated in terms of pack voltage stability, voltage ripple, charge/discharge efficiency, and computational latency. As shown in Table 3, the proposed model achieved a pack voltage deviation of ±24 mV and voltage ripple of 1.1%, compared with ±87 mV and 3.4%, respectively, for traditional control logic. The charge/discharge efficiency also increased to 96.3%, while the computational latency decreased to 18.2 ms, demonstrating improved electrical stability, energy efficiency, and responsiveness under dynamic operating conditions.

4.1.9. Discussion

The implementation of the stacked Bi-LSTM model demonstrates several key improvements in overall battery management system performance, as outlined below: i) Stacking Bi-LSTM models improved pack voltage deviation thanks to better SOC synchronization among cells. Voltage stability is essential for power electronic devices and EV inverters, as mentioned in Table 3; ii) More coordinated temperature regulation and load balancing led to smaller peak temperature values across the cells. This helps to enhance battery longevity and mitigate the risk of thermal runaway; iii) An improvement of 4.6 percentage points in power efficiency indicates fewer losses and better real-time power distribution among cells; iv) The model incorporates a novel mechanism for maintaining stable power flow under dynamic loads. This indicates its potential use in DC-DC converters and motor drives in EVs; v) Lastly, smaller computational latency indicates greater model applicability in microcontroller-based BMS hardware, which is predominantly used in EVs. The results of Table 4 show that the stacked Bi-LSTM model is superior in both SOC estimation and power distribution, with the highest efficiency among the models reviewed, and as such is the best candidate as the advanced battery management system for electric vehicles.

Table 3. Electrical performance metrics of real-time BMS simulation

Metric	Value (proposed model)	Baseline (traditional logic)
SOC estimation error (%)	0.98	4.92
Pack voltage deviation (mV)	±24	±87
Peak cell temperature (°C)	41.6	47.8
Voltage ripple during load (%)	1.1	3.4
Charge/discharge efficiency (%)	96.3	91.7
Computation latency (ms)	18.2	33.5

Table 4. Estimation of SOC and PDE

Model/method	SOC estimation RMSE (%)	MAE (%)	R^2 Score	PDE (%)	Key notes
Coulomb counting	4.92	4.21	0.812	89.34	The traditional method has a large error margin and hence, is not viable in dynamic scenarios.
Kalman filter (EKF)	3.45	2.93	0.871	89.34	Compared to the Coulomb method, it is an improvement; however, it still lacks accuracy in noisy and dynamic conditions.
Random forest	2.36	1.94	0.912	91.42	It is effective at pattern recognition but not suited for handling temporal dependencies.
LSTM	1.68	1.29	0.948	91.42	It is capable of making predictions on time series data but not as effective as stacked Bi-LSTM.
Stacked Bi-LSTM (proposed)	0.98	0.75	0.985	96.82	It provides the best prediction accuracy and is useful in improving the efficiency of power distribution.

4.2. SOC estimation

The stacked Bi-LSTM performs better than the Coulomb counting approach and the Kalman filter, with an RMSE of 0.98% and an R^2 of 0.985. The advantage of the stacked Bi-LSTM model is its ability to learn both the forward and backward connections in time, which is very important for understanding the effect of load and environmental conditions on battery performance. Machine learning approaches such as Random Forest and LSTM also demonstrate improvement over traditional approaches, but the Stacked Bi-LSTM model utilizes a deeper architecture that learns more complex patterns, resulting in improved generalization and accuracy.

4.3. Power distribution efficiency

The proposed stacked Bi-LSTM approach achieved a power distribution efficiency (PDE) of 96.82%, demonstrating improved power allocation performance compared with the other evaluated methods, including approaches reporting efficiencies of approximately 91.42%. This improvement is attributed to the model's ability to predict the state of charge (SOC) accurately and use these predictions to support dynamic power allocation among participating battery cells or modules. By assigning power according to predicted SOC levels while considering minimum SOC thresholds and thermal constraints, the proposed strategy helps reduce load imbalance and supports more stable battery operation. These results indicate that integrating SOC prediction with prediction-informed power distribution has the potential to improve thermal management and reduce uneven battery degradation in electric vehicle battery management systems.

4.4. Real-world application

The proposed stacked Bi-LSTM model offers potential practical applications in electric vehicle battery management systems (BMS) by improving SOC estimation accuracy and supporting dynamic power balancing among battery cells or modules. By using predicted SOC values to guide power allocation, the system can help reduce uneven loading and minimize the risk of thermal hotspots during battery operation. This approach may also contribute to reducing battery degradation and improving the consistency of battery performance over extended operating periods. Therefore, integrating the proposed model into an EV-BMS framework could support safer, more efficient, and more reliable battery operation under varying driving and load conditions.

5. CONCLUSION

This study presented an integrated BMS framework combining a stacked Bi-LSTM network for SOC estimation with a prediction-informed rule-based strategy for dynamic power distribution in electric vehicles. The Bi-LSTM network captures temporal relationships in battery voltage, current, and temperature data, while the predicted SOC is subsequently used to support dynamic power balancing. The reported results demonstrate an SOC estimation RMSE of 0.98%, MAE of 0.75%, and R^2 of 0.985, indicating improved prediction performance compared with the considered conventional and machine-learning approaches. The associated power distribution strategy achieves a reported PDE of 96.82%. The electrical performance analysis further reports a reduction in voltage ripple from 3.4% to 1.1%, peak cell temperature from 47.8 °C to 41.6 °C, and an improvement in charge/discharge efficiency from 91.7% to 96.3%, with a computational latency of approximately 18 ms. The results corroborate that stacked Bi-LSTM-based SOC predictions, in conjunction with prediction-informed power distribution, have strong potential to further develop intelligent EV BMS. More evaluation under a variety of circumstances, where various constraints of the system will be exercised, is justified to assess broader limits and scope.

The purpose of this study is to integrate stacked Bi-LSTM models for SOC prediction and propose an EV BMS technique that uses predictions to optimize the dynamic power distribution. Instead of claiming individual Bi-LSTM components to be genuinely novel, this technique uses prediction of SOC to consider the decision regarding power allocation and battery balancing. The primary differentiating features of this framework are: i) Integrated SOC prediction and power distribution: The power distribution strategy uses the predicted SOC by the stacked Bi-LSTM models for dynamic battery power balancing; ii) Hierarchical temporal representation: The stacked Bi-LSTM models capture the intricate temporal relations of battery voltage, current, temperature, and SOC under changing environmental conditions; iii) Prediction-informed power allocation: In the light of the assessed conditions, the power allocation process is improved by means of SOC predictions to distribute the load across battery cells or modules; and iv) Real-time oriented implementation: The proposed technique exhibits a reported computational latency of approximately 18 ms which suggests that it is suitable for embedded BMSs in the evaluated setting. The goal is to combine deep learning models for temporal SOC estimation and prediction-informed power allocation for intelligent EV battery management systems.

This framework will continue to be developed through further validation, expansion, and practical applications. For the initial stages, the BMS framework will be validated against fully characterized battery datasets where the capacity, voltage, temperature, and chemistry of the batteries are defined, as well as the driving cycles. The impact of temperature and the various driving cycles on SOC estimation will be analyzed to better understand the proposed framework. Improved long-term SOC estimation will be achieved through the inclusion of lower voltage cutoff, internal resistance, and cycle count in estimating battery aging. The prediction-informed power distribution strategy will be further developed with more advanced mathematics and validated at the cell and module level. Advances will also be made in improving framework interpretability through Explainable AI (XAI), transfer learning for different battery chemistries, and model compression for low-power embedded BMS. Application of federated learning may provide the means for privacy-preserving model training. The proposed intelligent BMS framework will experience beneficial advances in all aspects of robustness, interpretability, and practical applications through these improvements.

FUNDING INFORMATION

There are no sources of funding that have supported the work. So, the authors state that no funding was involved.

AUTHOR CONTRIBUTIONS STATEMENT

This journal uses the Contributor Roles Taxonomy (CRediT) to recognize individual author contributions, reduce authorship disputes, and facilitate collaboration.

Name of Author	C	M	So	Va	Fo	I	R	D	O	E	Vi	Su	P	Fu
Yagnasri Archana	✓	✓	✓	✓	✓	✓		✓	✓	✓			✓	
Gondlala Narsaiah Srinivas	✓	✓	✓	✓		✓		✓	✓	✓	✓	✓		
Rajeshkhanna Bhuthkuri	✓		✓	✓			✓			✓	✓		✓	
Bodapati Venkata Rajanna	✓	✓	✓	✓	✓	✓	✓	✓	✓	✓	✓	✓	✓	

C : **C**onceptualization
M : **M**ethodology
So : **So**ftware
Va : **Va**lidation
Fo : **Fo**rmal analysis
I : **I**nvestigation
R : **R**esources
D : **D**ata Curation
O : Writing - **O**riginal Draft
E : Writing - Review & **E**diting
Vi : **Vi**sualization
Su : **Su**pervision
P : **P**roject administration
Fu : **Fu**nding acquisition

CONFLICT OF INTEREST STATEMENT

The authors state that they have no known competing financial interests or personal relationships that could have appeared to influence the work reported in this paper. Authors State no conflict of interest.

DATA AVAILABILITY

The data presented in this study are available from the corresponding author upon reasonable request.

REFERENCES

[1] M. Yılmaz, E. Çinar, and A. Yazıcı, "A transformer-based model for state of charge estimation of electric vehicle batteries," *IEEE Access*, vol. 13, pp. 33035–33048, 2025, doi: 10.1109/ACCESS.2025.3542961.
[2] P. Xu, C. Wang, J. Ye, and T. Ouyang, "State-of-charge estimation and health prognosis for lithium-ion batteries based on temperature-compensated Bi-LSTM network and integrated attention mechanism," *IEEE Transactions on Industrial Electronics*, vol. 71, no. 6, pp. 5586–5596, Jun. 2024, doi: 10.1109/TIE.2023.3292865.
[3] S. Vedhanayaki and V. Indragandhi, "A Bayesian optimized deep learning approach for accurate state of charge estimation of lithium-ion batteries used for electric vehicle application," *IEEE Access*, vol. 12, pp. 43308–43327, 2024, doi: 10.1109/ACCESS.2024.3380188.
[4] G. Yang, X. Fan, R. Li, and X. Zhang, "State of charge estimation of lithium-ion battery for underwater vehicles using MM-UKF under hierarchical temperature compensation," *IEEE Access*, vol. 12, pp. 95831–95845, 2024, doi: 10.1109/ACCESS.2024.3425950.
[5] N. Sradha, G. Sruthi, and J. F. G. Poovathy, "Estimation of essential battery state parameters for battery management systems (BMS) in electric vehicles using long short-term memory (LSTM) and time series analysis combined with extended Kalman filter," *IEEE Access*, vol. 13, pp. 146944–146955, 2025, doi: 10.1109/ACCESS.2025.3600442.
[6] S. Sharma and B. K. Panigrahi, "Aging responsive state of charge prediction of lithium-ion battery using attention mechanism based convolutional neural networks," *IEEE Transactions on Industry Applications*, vol. 60, no. 5, pp. 7342–7355, Sep. 2024, doi: 10.1109/TIA.2024.3405431.
[7] L. Zhao and P. Qin, "Accurate SOC prediction and monitoring of each cell in a battery pack considering various influencing factors," *IEEE Transactions on Industrial Electronics*, vol. 70, no. 1, pp. 1025–1035, Jan. 2023, doi: 10.1109/TIE.2022.3146505.

[8] M. Choi, G.-J. Ko, T. Boongoen, N. Iam-On, S. Zu, and T. Cheong, "Driving-pattern-based ensemble clustering for SOC prediction in battery-swapping electric two-wheeled vehicles," *IEEE Access*, vol. 13, pp. 192006–192022, 2025, doi: 10.1109/ACCESS.2025.3626273.
[9] S. Rout and S. Das, "A noise covariance regulated robust modified adaptive extended Kalman filter for state of charge estimation of lithium-ion battery," *IEEE Access*, vol. 12, pp. 78434–78448, 2024, doi: 10.1109/ACCESS.2024.3408340.
[10] H. Lim, "Online ecological energy management for plug-in HEVs using optimal SOC prediction and stochastic optimization," *IEEE Transactions on Intelligent Transportation Systems*, vol. 25, no. 9, pp. 10885–10895, Sep. 2024, doi: 10.1109/TITS.2024.3379991.
[11] W. Cheng, S. Sun, H. Yin, Z. Wang, and W. Cai, "A novel method for estimating the state of charge of lithium batteries adopts a bidirectional gated recurrent unit with attention mechanism and piecewise estimation," *IEEE Access*, vol. 13, pp. 152997–153009, 2025, doi: 10.1109/ACCESS.2025.3600641.
[12] M. Yılmaz, E. Çinar, and A. Yazıcı, "Federated learning-based state of charge estimation in electric vehicles using federated adaptive client momentum," *IEEE Access*, vol. 13, pp. 72128–72141, 2025, doi: 10.1109/ACCESS.2025.3563188.
[13] N. Zhao, F. Zhang, Y. Yang, S. Coskun, X. Lin, and X. Hu, "Dynamic traffic prediction-based energy management of connected plug-in hybrid electric vehicles with long short-term state of charge planning," *IEEE Transactions on Vehicular Technology*, vol. 72, no. 5, pp. 5833–5846, May 2023, doi: 10.1109/TVT.2022.3229700.
[14] T. Ouyang, P. Xu, J. Lu, X. Hu, B. Liu, and N. Chen, "Coestimation of state-of-charge and state-of-health for power batteries based on multithread dynamic optimization method," *IEEE Transactions on Industrial Electronics*, vol. 69, no. 2, pp. 1157–1166, Feb. 2022, doi: 10.1109/TIE.2021.3062266.
[15] P. Xu, B. Liu, X. Hu, T. Ouyang, and N. Chen, "State-of-charge estimation for lithium-ion batteries based on fuzzy information granulation and asymmetric Gaussian membership function," *IEEE Transactions on Industrial Electronics*, vol. 69, no. 7, pp. 6635–6644, Jul. 2022, doi: 10.1109/TIE.2021.3097613.
[16] P. K. Mohanty, P. Jena, and N. P. Padhy, "TimeGAN-based diversified synthetic data generation following BERT-based model for EV battery SOC prediction: a state-of-the-art approach," *IEEE Transactions on Industry Applications*, vol. 61, no. 3, pp. 4167–4185, May 2025, doi: 10.1109/TIA.2025.3534165.
[17] S. Jafari and Y.-C. Byun, "Prediction of the battery state using the digital twin framework based on the battery management system," *IEEE Access*, vol. 10, pp. 124685–124696, 2022, doi: 10.1109/ACCESS.2022.3225093.
[18] S. Deb, A. K. Goswami, B. G. Hajra, R. L. Chetri, M. Roy, and R. Roy, "Development of machine learning based state-of-charge prediction model for plug-in electric vehicle's relocation in sharing system," *IEEE Transactions on Industry Applications*, vol. 59, no. 4, pp. 4662–4672, Jul. 2023, doi: 10.1109/TIA.2023.3271967.
[19] P. Mangaiyarkarasi, R. Jayaganthan, and A. V. Thayyil, "Development of an enhanced self-correcting equivalent circuit model for state estimation of lithium-ion batteries in electric vehicle applications," *IEEE Access*, vol. 13, pp. 197616–197633, 2025, doi: 10.1109/ACCESS.2025.3634374.
[20] S. Jorkesh, R. Ahmed, S. Habibi, R. Hosseininejad, and S. Xu, "Battery state of charge and state of health estimation using a new hybrid deep neural network approach," *IEEE Access*, vol. 13, pp. 12566–12580, 2025, doi: 10.1109/ACCESS.2024.3488596.
[21] Y. Chen, Y. Liu, Y. He, Z. Lyu, Y. Cai, and S. Zhang, "SOC estimation of lithium-ion battery pack based on discharge stage division and fusion modeling," *IEEE Transactions on Instrumentation and Measurement*, vol. 74, pp. 1–14, 2025, doi: 10.1109/TIM.2025.3550214.
[22] H. Liu, F. Liang, T. Hu, J. Hong, and H. Ma, "Multi-scale fusion model based on gated recurrent unit for enhancing prediction accuracy of state-of-charge in battery energy storage systems," *Journal of Modern Power Systems and Clean Energy*, vol. 12, no. 2, pp. 405–414, 2024, doi: 10.35833/MPCE.2023.000726.
[23] R. Guo and W. Shen, "Lithium-ion battery state of charge and state of power estimation based on a partial-adaptive fractional-order model in electric vehicles," *IEEE Transactions on Industrial Electronics*, vol. 70, no. 10, pp. 10123–10133, Oct. 2023, doi: 10.1109/TIE.2022.3220881.
[24] M. K. S. Verma *et al*., "On-board state estimation in electrical vehicles: achieving accuracy and computational efficiency through an electrochemical model," *IEEE Transactions on Vehicular Technology*, vol. 69, no. 3, pp. 2563–2575, Mar. 2020, doi: 10.1109/TVT.2020.2966266.
[25] Z. Zhang *et al*., "An improved bidirectional gated recurrent unit method for accurate state-of-charge estimation," *IEEE Access*, vol. 9, pp. 11252–11263, 2021, doi: 10.1109/ACCESS.2021.3049944.
[26] E. Athanasakis, G. Spanos, A. Papadopoulos, A. Lalas, K. Votis, and D. Tzovaras, "A comprehensive leakage-free forecasting pipeline for segmented time series: application to cross-trip state-of-charge prediction in automated electric vehicles," *IEEE Transactions on Intelligent Vehicles*, vol. 10, no. 12, pp. 5213–5228, Dec. 2025, doi: 10.1109/TIV.2024.3519751.
[27] F. Zhao, Y. Li, X. Wang, L. Bai, and T. Liu, "Lithium-ion batteries state of charge prediction of electric vehicles using RNNs-CNNs neural networks," *IEEE Access*, vol. 8, pp. 98168–98180, 2020, doi: 10.1109/ACCESS.2020.2996225.
[28] C. Vishnu and A. Saleem, "Adaptive integral correction-based state of charge estimation strategy for lithium-ion cells," *IEEE Access*, vol. 10, pp. 69499–69510, 2022, doi: 10.1109/ACCESS.2022.3187193.
[29] A. Dharani *et al*., "A digital twin framework for dual-path estimation of battery state of charge and state of health using hybrid physics-informed machine learning," *IEEE Access*, vol. 14, pp. 6911–6926, 2026, doi: 10.1109/ACCESS.2026.3652279.
[30] L. Ling and Y. Wei, "State-of-charge and state-of-health estimation for lithium-ion batteries based on dual fractional-order extended Kalman filter and online parameter identification," *IEEE Access*, vol. 9, pp. 47588–47602, 2021, doi: 10.1109/ACCESS.2021.3068813.
[31] Y. Joo, C. Choi, S. Lee, and Y. Son, "Mixing high-frequency bands based on wavelet decomposition for long-term state-of-charge forecasting of lithium-ion batteries," *IEEE Access*, vol. 13, pp. 111670–111680, 2025, doi: 10.1109/ACCESS.2025.3583216.
[32] J. Wang, Y. Ye, M. Wu, F. Zhang, Y. Cao, and Z. Zhang, "Temporal convolutional recombinant network: a novel method for SOC estimation and prediction in electric vehicles," *IEEE Access*, vol. 12, pp. 128326–128337, 2024, doi: 10.1109/ACCESS.2024.3434557.
[33] A. Kamal, S. Sambhaji Patil, S. Bharathraj, A. Deshwal, and S. P. Adiga, "Symbolic regression for state estimation of lithium-ion battery," *IEEE Access*, vol. 13, pp. 184030–184045, 2025, doi: 10.1109/ACCESS.2025.3621556.
[34] M. Wei, M. Ye, J. B. Li, Q. Wang, and X. Xu, "State of charge estimation of lithium-ion batteries using LSTM and NARX neural networks," *IEEE Access*, vol. 8, pp. 189236–189245, 2020, doi: 10.1109/ACCESS.2020.3031340.
[35] G. Dong, Y. Xu, and Z. Wei, "A hierarchical approach for finite-time H-∞ state-of-charge observer and probabilistic lifetime prediction of lithium-ion batteries," *IEEE Transactions on Energy Conversion*, vol. 37, no. 1, pp. 718–728, Mar. 2022, doi: 10.1109/TEC.2021.3109896.

BIOGRAPHIES OF AUTHORS



Yagnasri Archana received her M.Tech. degree in power electronics and electrical drives (PEED) from G. Narayanamma Institute of Technology and Sciences (GNITS), Hyderabad, India, in 2014, and her B.Tech. degree in electrical and electronics engineering (EEE) from RRS College of Engineering and Technology, Patancheru, Hyderabad, India, in 2010. She is currently working as an assistant professor in the Department of Electrical and Electronics Engineering (EEE) at JNTUH University College of Engineering Sultanpur (UCES), Sultanpur, Sangareddy, India. She has 10 years of teaching experience. Her research interests include the control of battery management systems in electric vehicles. She can be contacted at email: yagnasriarchana@gmail.com.



Gondlala Narsaiah Srinivas received the B.Tech. degree in electrical and electronics engineering from JNTU College of Engineering, Kukatpally, Hyderabad, India; the M.E. degree in power systems from Osmania University College of Engineering, Hyderabad, India; and the Ph.D. degree in power systems from JNTU Hyderabad, India. He is currently working as a senior professor in the Department of Electrical and Electronics Engineering at JNTUH University, Hyderabad, India. He is a member of SSI and has more than 28 years of teaching and research experience at institutions including OUCE, OUCT, JNTUH CEA, JNTUH CES, and JNTUH-UCESTH. His research interests include power systems, electrical machines, and advanced control applications. He can be contacted at email: gnsgns.srinivas785@gmail.com.



Rajeshkhanna Bhuthkuri is an assistant professor at JNTUH University Engineering College, Hyderabad, India. He received his B.Tech. (EEE), M.Tech. (PE&ID), and Ph.D. (EEE) degrees from JNTUH. He also holds advanced master's degrees in blockchain and data science from IIT Patna, and in AI and computer vision from NIT Warangal, as well as an M.B.A. from the University of the People, USA. He is a CEEE Fellow at IIT Madras and is currently a postdoctoral fellow at Lincoln University College, Malaysia. He serves as a LINC Fellow and has held academic roles with DFICU (UK), UoP (USA), Windsor (UK), and Utel (Philippines). He has authored several research publications and serves on the editorial boards of STM, MAT, SECIT, and Springer Nature journals. He has served as a chair, keynote speaker, and panel discussion member at several technical sessions. His research interests include electric vehicles, AI, machine learning, blockchain, data science, power electronics, and digital energy systems. He is a member of AMIEE and INAE and a co-founder and board member of GradeMe AI. He can be contacted at email: raajeshkhanna.bhuthkuri@jntuhceh.ac.in.



Bodapati Venkata Rajanna is currently working as an assistant professor in the Department of Electrical and Electronics Engineering at G. Narayanamma Institute of Technology and Science (for Women), Hyderabad, India. He received his B.Tech. degree in electrical and electronics engineering from Chirala Engineering College, JNTU, Kakinada, India, in 2010; his M.Tech. degree in power electronics and drives from Koneru Lakshmaiah Education Foundation, Guntur, India, in 2015; and his Ph.D. in electrical and electronics engineering from Koneru Lakshmaiah Education Foundation, Guntur, India, in 2021. His current research interests include dynamic modeling of batteries for renewable energy storage; battery management systems; electric vehicles and portable electronics applications; integration of renewable energy sources with battery energy storage systems (BESS); smart metering and smart grids; microgrids; automatic meter reading (AMR) devices; GSM/GPRS and power line carrier (PLC) communication; and various modulation techniques, such as QPSK, BPSK, ASK, FSK, OOK, and GMSK. He can be contacted at email: bv.rajanna@gnits.ac.in or rajannabv2012@gmail.com.