International Journal of Power Electronics and Drive System (IJPEDS)
Vol. 17, No. 4, December 2026, pp. 2985~2996
ISSN: 2088-8694, DOI: 10.11591/ijpeds.v17.i4.pp2985-2996

Characteristic improvement of maximum power point tracker using DC-DC buck converter based on genetic algorithm-tuned GPID controller

Muhammad Irwanto[1,2], Habib Satria[3], Baharuddin Ismail[2], Togar Timoteus Gultom[1], Mawardi[4], Yoga Tri Nugraha[4]

[1]Center of Excellence for Health Based on IoT and Renewable Energy, Department of Electrical Engineering, Faculty of Science and Technology, Universitas Prima Indonesia (UNPRI), Medan, Indonesia
[2]Fellow of the Center of Excellence for Renewable Energy (CERE), Faculty of Electrical Engineering and Technology, Universiti Malaysia Perlis (UniMAP), Perlis, Malaysia
[3]Department of Electrical Engineering, Faculty of Technology, Universitas Medan Area (UMA), Medan, Indonesia
[4]Department of Electrical Engineering, Faculty of Engineering, Universitas Al-Azhar Medan (UNAZ), Medan, Indonesia

Article Info

Article history:

Received Jun 7, 2026
Revised Sep 19, 2026
Accepted Oct 4, 2026

Keywords:

DC-DC converter
Genetic algorithm
GPID controller
Maximum power point
Photovoltaic module

ABSTRACT

Effective maximum power point tracking (MPPT) is crucial for preserving steady power output since photovoltaic (PV) systems undergo substantial characteristic degradation under changing solar irradiation conditions. In order to enhance the dynamic characteristics of a DC-DC buck converter utilized as an MPPT system for photovoltaic applications, this work suggests a genetic algorithm (GA)- tuned proportional-integral-derivative (PID) controller. Finding the ideal controller parameters that reduce steady-state error, settling time, rise time, and overshoot while preserving the required output voltage is the goal. Based on a fitness function obtained from the converter's closed-loop response, the GA was used to maximize the controller gains. According to simulation results, K_p = 100, K_i = 12.84, and K_d = 100 were found to be the ideal controller parameters. A very quick rise time of 4.07×10^{-10} s and a settling time of 7.25×10^{-10} s were attained using the suggested controller. In comparison to 0.01 s without GA tweaking, the converter achieved the required output power of 150 W and output voltage of 14.7 V in 0.005 s under standard test conditions. Additionally, the suggested system maintained a steady output voltage of 14.68 V and output power of 149.64 W when solar irradiance dropped from 1000 W/m² to 300 W/m², exhibiting greater robustness and tracking characteristics.

This is an open access article under the CC BY-SA license.

Corresponding Author:

Muhammad Irwanto
Center of Excellence for Health Based on IoT and Renewable Energy, Department of Electrical Engineering
Faculty of Science and Technology, Universitas Prima Indonesia (UNPRI)
Medan, Indonesia
Email: muhammadirwanto@unprimdn.ac.id, irwanto@unimap.edu.my

1. INTRODUCTION

Photovoltaic (PV) technology is becoming more and more popular as a sustainable energy source for microgrid, industrial, and residential applications. Improving energy harvesting efficiency in a variety of environmental circumstances, such as partial shade and variations in irradiance, has been the subject of recent research. In order to maximize power extraction while preserving system reliability, advanced PV systems increasingly incorporate sophisticated control and optimization approaches. Research by [1], [2], and [3] showed that PV system performance is greatly improved by merging data-driven methods with contemporary

control systems. Additionally, hybrid artificial intelligence (AI) approaches have surfaced as viable ways to overcome dynamic operating conditions and the nonlinear nature of PV modules [4], [5].

Because they provide maximum power point tracking (MPPT) and provide impedance matching between the PV module and the load, DC-DC converters continue to be a crucial part of PV systems. The buck converter is still one of the most popular topologies because of its low cost, straightforward design, and excellent efficiency in step-down voltage applications. Recent studies by [1] and [6] demonstrated how well buck converters enable effective MPPT operation and maintain a steady output voltage. For contemporary PV systems, new converter configurations including buck-boost, multiport, and dual-input converters provide increased flexibility and broader working ranges [7], [8]. These findings suggest that the choice of converter topology is critical to the overall performance and dynamic response of photovoltaic energy systems.

MPPT strategies have evolved from traditional algorithms to intelligent and adaptable methods. Due to their simplicity and ease of use, traditional techniques like incremental conductance (IC) and perturb and observe (P&O) are still widely used; however, they frequently experience oscillations around the maximum power point (MPP) and perform worse in weather conditions that change quickly [9], [10]. Fuzzy logic, model predictive control, and machine learning-based MPPT approaches, which provide better tracking accuracy and quicker response to environmental changes, have been developed by researchers to overcome these constraints [3], [11], and [12]. According to recent research, data-driven strategies using gated recurrent unit (GRU) models and gradient boosting can greatly improve real-time tracking performance under dynamic irradiance conditions [3].

Due to their capacity to find global optima under challenging operating conditions, metaheuristic optimization approaches have grown in popularity for MPPT applications. When compared to traditional methods, particle swarm optimization (PSO), genetic algorithm (GA), and hybrid optimization algorithms have shown better tracking efficiency, especially in partial shading circumstances [2], [13], [14]. A hybrid GA-PSO methodology outperformed standalone optimization techniques in terms of tracking accuracy and steady-state oscillations, according to Hasan *et al.* [13]. In a similar vein, Bai and Qiao [15] demonstrated that when determining the global maximum power point, combining GA and PSO enhanced convergence speed and robustness. According to these results, metaheuristic methods are quite appropriate for contemporary PV systems that operate in unpredictable situations.

In order to enhance MPPT performance, recent research has also concentrated on combining optimization algorithms with sophisticated controllers. When compared to conventionally tuned controllers, GA-tuned PID and generalized PID (GPID) controllers have shown superior transient response characteristics, such as decreased overshoot, shorter settling periods, and enhanced stability [16], [17]. By dynamically modifying control parameters in response to shifting operating conditions, bio-inspired optimization techniques and adaptive genetic algorithms further improve controller performance [18], [19]. Furthermore, tracking accuracy and robustness under partial shading and temperature variations have been demonstrated to be significantly improved by hybrid AI-GA approaches that use fuzzy logic and neuro-fuzzy systems [4], [20]. To achieve high-efficiency PV energy conversion, such intelligent controller designs are becoming more and more crucial.

The development of MPPT systems for PV applications still faces a number of obstacles despite significant advancements. Accurately determining the global MPP remains challenging under partial shading conditions, and the computational complexity of sophisticated optimization algorithms may prevent its use in low-cost embedded systems [5], [15]. In order to balance tracking performance and computing needs, recent research has focused on hardware-accelerated implementations, adaptive algorithms, and lightweight optimization strategies [21], [22]. Additionally, future MPPT research is anticipated to benefit greatly from AI-assisted prediction models and hybrid optimization frameworks, which enable quicker reaction, increased efficiency, and enhanced dependability under extremely dynamic environmental conditions [3], [5], [23]. Therefore, a viable path for next-generation photovoltaic energy systems is the integration of intelligent control, sophisticated converter topologies, and adaptive optimization techniques.

Studies on GA, PSO, fuzzy logic, neuro-fuzzy systems, model predictive control, and adaptive MPPT have demonstrated better convergence speed, reduced oscillation, and higher tracking accuracy. However, fewer studies have examined the direct improvement of the dynamic characteristics of a DC-DC buck converter (DDBC) by using a GA-tuned GPID controller with optimized proportional, integral, derivative, and gain parameters. In particular, limited attention has been given to how the optimized controller affects steady-state error, settling time, rise time, overshoot, voltage stability, and output power stability when solar irradiance changes sharply. GA based GPID tuning for buck converter performance, not only as an MPPT strategy but also as a method to strengthen converter response under unstable PV input conditions. Therefore, this manuscript proposes a GA-tuned GPID controller for a DDBC using MATLAB and compares its performance with an untuned converter to show whether the proposed controller can produce faster response, lower transient disturbance, and more stable voltage and power output under changing irradiance.

2. METHOD

The DDBC developed in a transfer function that is a necessary equation in GA is covered in this section. The DDBC is equipped with the GA-tuned GPID controller. GA is used to determine the best parameters for a PID controller that is coupled in series with a gain, G, so that it can function as a controller system, or GPID controller. The input of DDBC is connected to a PV module; the GA-tuned GPID controller acts as a maximum power point tracker of the PV module. This section observes and analyzes the characteristics of the PV module, optimum parameters of the PID controller (the gains of proportional, K_p, integral, $K_{i,}$ and derivative, K_d), the closed-loop response of the DDBC based on the GA-tuned GPID controller, and the input and output of the DC-DC converter.

2.1. Genetic algorithm-tuned GPID controller on DC-DC buck converter

Figure 1 shows a proposed genetic algorithm-tuned GPID controller on the DDBC. The circuit of the DDBC is constructed from the components of MOSFET, diode, inductor, L, resistor, R, and capacitor, C [24]. The circuit is supplied by an input voltage, V_{in}, a appropriate values of the inductor, L, resistor, R, and capacitor, C are required to achieve the required output voltage of $V_{out,}$ and they can be calculated following the formulations as stated by [24]. The transfer function of DDBC is given by (1) [25].

$$\frac{V_{out}}{V_{in}} = \frac{1}{LCS^2+\frac{L}{R}S+1} \quad (1)$$

Figure 2 shows a flowchart of the GA-tuned PID controller on a DC-DC buck converter. There are eleven processes for obtaining the optimum parameters of the PID controller. They are stated from the input process to the verification of its optimum values in the step response of the overall system:

i) The specification of DDBC as the input process: DDBC is designed for an input voltage, V_{in} of 20.64 V, output power, P_{out} of 150 W, output voltage, V_{out} of 14.7 V, and switching frequency, f_s of 10 kHz. The appropriate values of inductor L, capacitor C, and resistor R are obtained to meet these input and output requirements. The main objective of the design is to produce a fast, stable, and accurate output voltage response of DDBC for its input voltage from PV module.

ii) Problem definition: A plant model of DDBC is defined as a transfer function with its output voltage in the s-domain as $V_{out}(s) = G(s)$, thus, (1) can be written in (2). A fitness function, J is defined by (3) as the closed-loop step response of the transfer function. It is minimized following a lower bound, $l_b = [0\ 0\ 0]$, and upper bound, $u_b = [100\ 100\ 100]$ to obtain the decision variables, $x = [K_{p,}\ K_{i,\ and}\ K_d]$.

$$G(s) = \frac{V_{in}}{LCS^2+\frac{L}{R}S+1} \quad (2)$$

$$J = \text{Overshoot} + \text{Settling time} + \text{Rise time} + \int |e(t)|\, dt \quad (3)$$

iii) GA initialization: The GA process is started by initializing some GA parameters (population size, maximum generation, and random initial population). The maximum generation and population size are set by 100 and 50, respectively. The initial population size is generated randomly for each individual of $[K_{p,}\ K_{i,}$ and $K_d]$ within the bounds of $[l_b$ and $l_u\ ]$.

iv) Fitness evaluation: The fitness evaluation is conducted by firstly creating the transfer function of the PID controller, C(s) as shown in (4), and the closed-loop transfer function of the overall system (DDBC and PID controller), T(s), as shown in (5). GA processes the achievement of PID controller parameters (K_p, $K_{i,}$ and K_d). Each parameter candidate is tested to determine the performance of DDBC through its step response. In this case, GA performs a step response analysis based on its error signal, e(t), following (6), where y(t) is the system output response. Then, the fitness function is calculated following (3), and its value is minimized. A smaller fitness indicates a better characteristic if its step response has a lower overshoot, faster rise time, faster settling time, and smaller steady-state error.

$$C(s) = K_p + \frac{K_i}{S} + K_d s \quad (4)$$

$$T(s) = \frac{G(S)C(S)}{1+G(S)C(S)} \quad (5)$$

$$e(t) = 1 - y(t) \quad (6)$$

v) Selection of PID controller parameters (K_p, K_i and K_d): GA selects the best parameter candidate of the PID controller after evaluating all individuals. The selection process chooses individuals with the lower fitness values that produce better characteristics of the DC-DC buck converter. The selected individuals become the parent solutions for the next generation.

vi) Crossover of GA: Crossover is a genetic operator that combines two parameter sets (K_{p1}, K_{i1} and K_{d1}) and (K_{p2}, K_{i2} and K_{d2}) to produce one or more new offspring solutions (new candidate solutions). As the generations progress, crossover contributes significantly to improving the dynamic response of the DDBC by shortening settling time, reducing overshoot, and minimizing steady-state error.

vii) Mutation: The mutation process occurs to avoid the population becoming too similar after several generations. Mutation can increase the diversity of the population and avoid premature convergence. Mutation randomly changes some parameters of the PID controller slightly.

viii) Elitism: Elitism is a strategy in GA that ensures the best parameters of the PID controller from the current generation are preserved and transferred directly to the next generation without undergoing crossover or mutation. Elitism keeps the best-performing parameters of the PID controller from the current generation. Elitism guarantees that the best parameters of the PID controller are never lost during crossover or mutation.

ix) Termination check: GA checks whether the stopping condition is achieved (maximum generation is reached and convergence is achieved). If the stopping condition is not satisfied, the process returns to the fitness evaluation stage and another generation is created. The optimal PID controller settings (K_p, K_i, and K_d) are chosen if the halting condition is met.

x) Output optimum parameters of PID controller: GA produces the K_p, K_i, and K_d (optimum parameters of PID controller), these parameters correspond to the minimum fitness value. It is anticipated that the PID controller's optimized parameters will result in minimal overshoot, quick settling and rise times, and steady DDBC output voltage.

xi) Verification: Finally, the optimized parameters of the PID controller are applied to the DDBC model. The closed-loop response of the overall system (DDBC and PID controller) is plotted using MATLAB/Simulink. The response graph is analyzed to verify that the system is stable.

2.2. Implementation of GA-tuned PID controller on DC-DC buck converter

Figure 3 shows a circuit implementation of DDBC based on a GA-tuned PID controller with a PV module as its input voltage using MATLAB/Simulink. The circuit consists of PV module, voltage control circuit, circuit of DDBC circuit based on GA-tuned PID controller, and output power measurement. The PV module is a DC voltage source that has output voltage, short-circuit current, and output power of 20.64 V, 1.3 A, and 20 W for a temperature and solar irradiance of 25 °C and 1000 W/m^2, respectively [24]. The solar irradiance is changed from 1000 W/m^2 at the initial time to 300 W/m^2 at 0.025 s to observe the capability of the PID controller in responding to the change in solar irradiance on the characteristic of the DC-DC buck converter. The function of the voltage control circuit is to control the output voltage of the PV module under stable conditions. The circuit of DDBC is created based on the calculation results of inductor, L, resistor, R, and capacitor, C, following the required level of design. The best outcomes of the GA process are used to determine the PID controller settings (K_p, K_i, and K_d).

The characteristics of the PV module at a temperature and solar irradiance of 25 °C and 1000 W/m^{2,} and also under a solar irradiance change of 300 W/m^2, are observed and analyzed. The GA process result is used to determine the optimal gains of the proportional (K_p), derivative (K_d), and integral (K_i) terms. Additionally, the response of the entire system (DDBC and GPID controller) is shown and examined. The characteristics of DDBC without and with the GPID controller are also observed and analyzed.

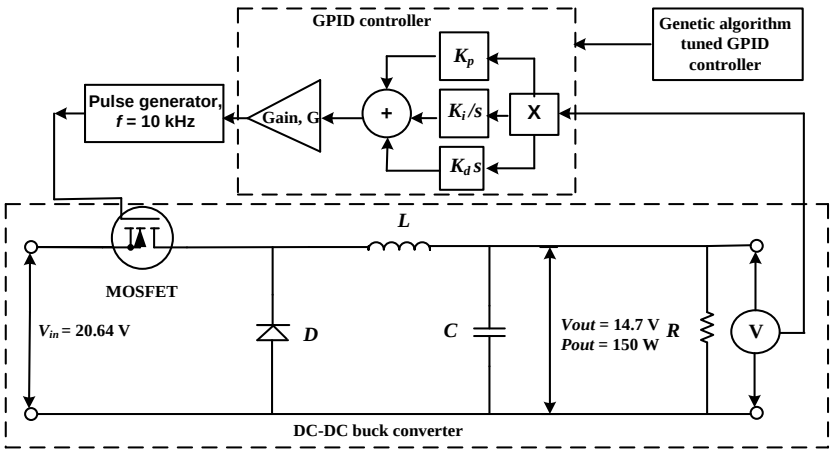

Figure 1. A proposed genetic algorithm tuned GPID controller on DC-DC buck converter

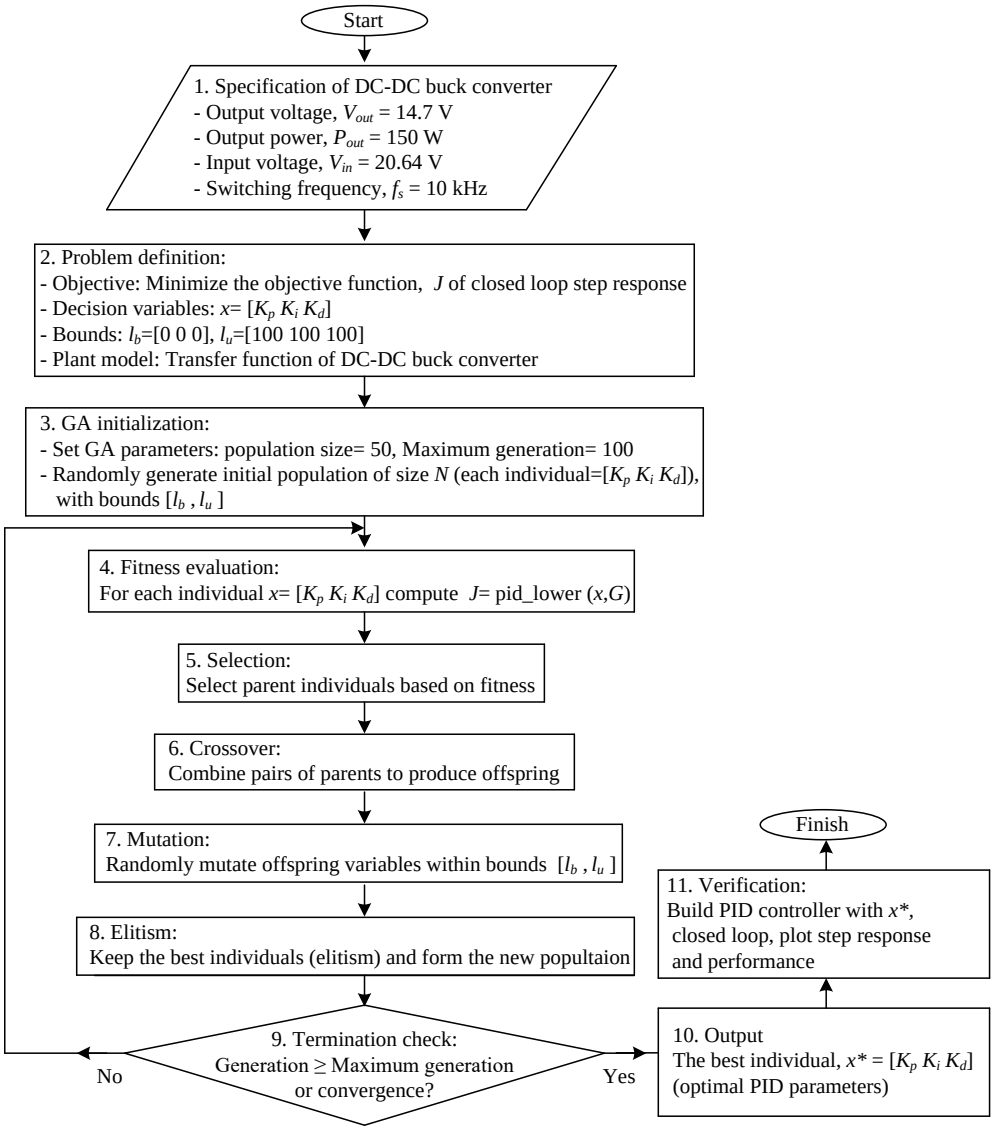

Figure 2. A GA process for tuning the parameters of PID controller

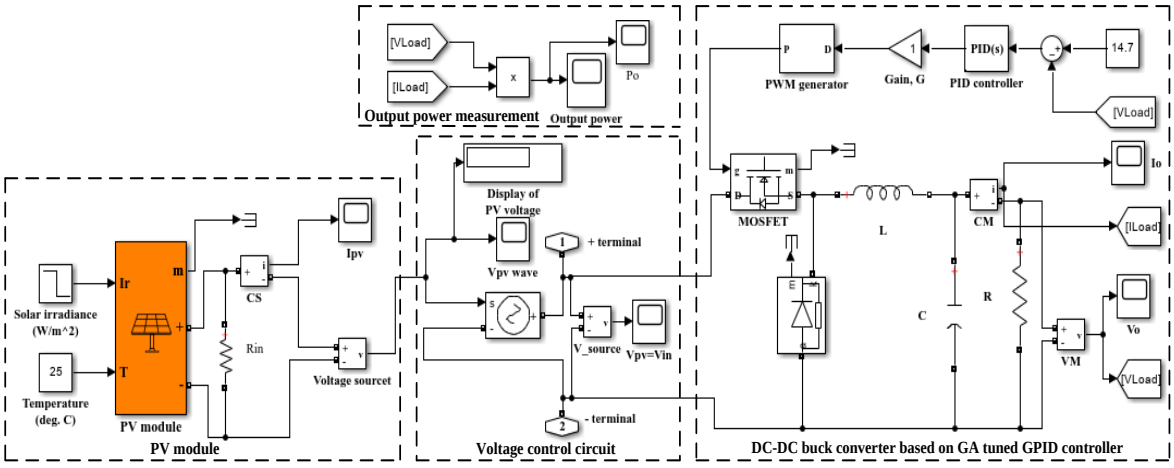

Figure 3. DDBC based on GA-tuned GPID controller with PV module as its input voltage

3. RESULTS AND DISCUSSION

This part presents and analyzes the PV module's characteristic observation results for power and current as a function of voltage. Additionally displayed and examined are the optimal PID controller parameters as well as the process outcomes of the GA-tuned PID controller on the DDBC and its response. The settling time, overshoot, rising time, and steady state value are used to analyze the system response. This section also describes the input voltage, current, and output power characteristics of a DDBC with and without a GPID controller. The impact of the GPID controller's gain, G, on the DDBC's characteristics is also covered.

3.1. The characteristics of the photovoltaic module

Figure 4 displays the typical results of the PV module's current and power as a function of voltage at 25 °C and 1000 W/m^2 for temperature and solar irradiance, respectively. The PV module generates its maximum current of 1.3 A for short-circuit conditions beginning at zero voltage, and its value is nearly constant as the voltage increases, according to the current as a function of voltage characteristic depicted in Figure 4(a). However, when the voltage hits its open-circuit potential of 20.64 V, the current decreases and approaches 0 A. In the meantime, Figure 4(b) illustrates the power as a function of voltage characteristic, where the output power of PV module rises as the voltage increases and achieves its maximum power of 20.4 W at a voltage of 16.9 V; this is known as the MPP. Following this operating point, the output power drastically drops until it reaches 0 W at an open-circuit voltage of 20.46 V. These findings show that the PV module performs best when it reaches its MPP, which is reached for combination operation at a temperature of 25 °C and also solar irradiation of 1000 W/m².

A typical result of current and power as a function of PV module voltage during a change in solar irradiation from 1000 W/m^2 to 300 W/m^2 is displayed in Figure 5. The output current in Figure 5(a) drastically diminishes as the irradiance decreases, with the voltage at 10.63 V falling from roughly 1.30 A at 1000 W/m² to just 0.39 A under 300 W/m². On the other hand, while the open-circuit voltage drops to roughly 19.16 V at the lower irradiance level, the operational voltage is less impacted by variations in irradiance. Similar power output trends can be seen in Figure 5(b), where the highest power drops from roughly 13.81 W at 10.63 V under 1000 W/m² to just 4.16 W at the same voltage when the irradiance is lowered to 300 W/m². The maximum power measured at lower irradiance is around 5.74 W at 16.07 V, which is significantly less than the power achieved at higher solar irradiation. The output power drops to zero as the voltage gets closer to 19.16 V because the current becomes insignificant. These findings unequivocally show that solar irradiance has a significant impact on the PV module's current generation capacity and power output, with higher irradiance levels permitting higher energy production.

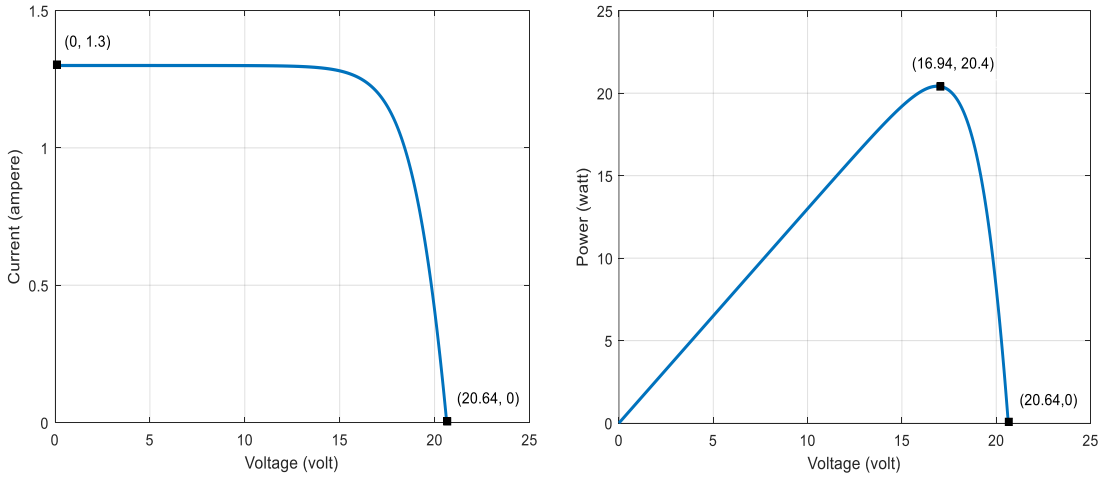

(a) (b)

Figure 4. Characteristics of PV module at temperature and solar irradiance of 25 °C and 1000 W/m^2, respectively: (a) current in relation to voltage and (b) power in relation to voltage

3.2. Genetic algorithm-tuned PID controller on DC-DC buck converter

The results of the GA procedure are used to determine the derivative gain, K_d = 100, integral gain, K_i = 12.84, and proportional gain, K_p = 100. As seen in Figures 1 and 3, these are the PID controller's ideal

parameters that are given into its function block. A closed-loop system is produced by the values of proportional gain, K_p, derivative gain, K_d, and integral gain, K_i, of the PID controller and the inductor, L, capacitor, C, and resistor, R, of the DDBC (5). Thus, Figure 6 depicts a closed-loop response on a DDBC utilizing a GA adjusted PID controller. It shows that a GA-tuned PID controller can enhance the DC-DC buck converter's characteristics, particularly when it comes to adjusting the input voltage to maintain the intended output voltage of 14.7 V.

The rising time and settling time of 4.07×10^{-10} s and 7.25×10^{-10} s, respectively, show that the DC-DC buck converter's GA-tuned PID controller can react quickly to changes in its input voltage and quickly stabilize its output voltage. It refers to the speed at which the DDBC reaches its steady-state condition following an input voltage change on its input side. Figure 6 demonstrates that the DC-DC buck converter's GA-tuned PID controller can quickly reach its steady-state values of output power, output current, and output voltage. The steady-state value is obtained at 1.2×10^{-9} s. Overall, the closed-loop response verifies that the DDBC has good dynamic and steady-state characteristics thanks to the GA-tuned PID controller. The GA-tuned PID controller simultaneously delivers minimal steady-state error, low overshoot, short settling time, and quick response. These features show that the suggested GA-tuned PID controller method is appropriate for realistic DC-DC buck converters.

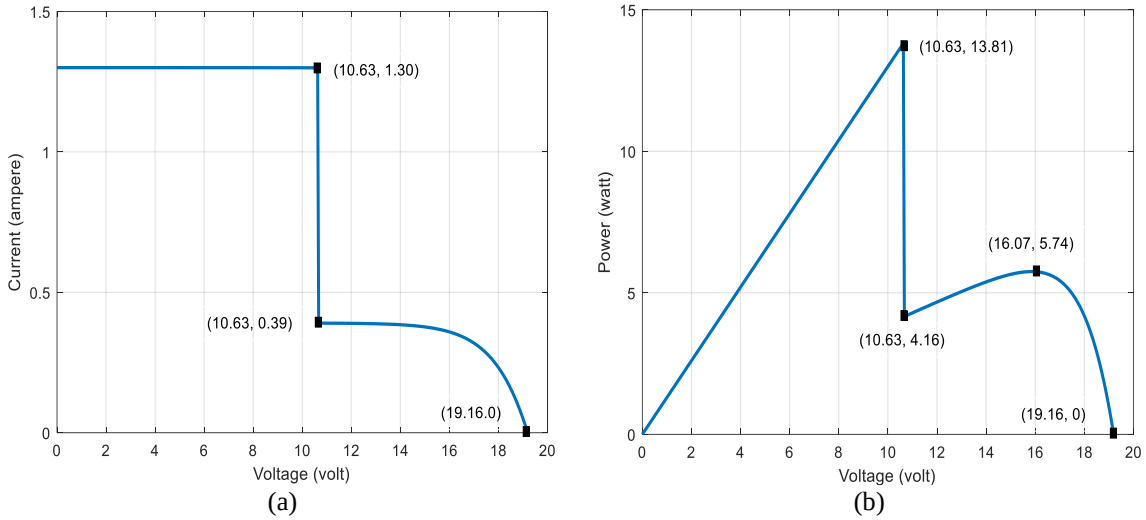

Figure 5. Characteristics of a PV module at solar irradiance change from 1000 W/m^2 to 300 W/m^2: (a) current in relation to voltage and (b) power in relation to voltage

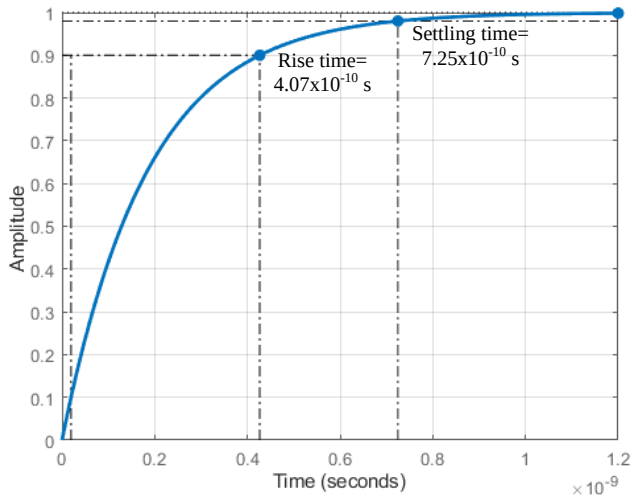

Figure 6. Closed-loop response using GA-tuned PID controller on DC-DC buck converter

3.3. Characteristics of DDBC with and without GPID controller

Figure 7 displays the DC-DC buck converter's characteristics at 25 °C and 1000 W/m^2 for temperature and solar irradiation, respectively. The DDBC with a GA-tuned PID controller achieves the intended output voltage considerably more quickly than the converter without GA, as seen in Figure 7(a). While the DDBC without GA takes about 0.01 seconds to reach its steady-state condition, the DDBC with a GA-tuned PID controller-based response seems to settle in about 0.005 seconds. In contrast to the DDBC without a GA-tuned PID controller, which takes longer to achieve the same level, the DDBC with a GA-tuned PID controller climbs rapidly and settles at the steady-state value of roughly 14.7 V in a short amount of time. This indicates that the DDBC with a GA-tuned PID controller provides a quicker dynamic response and a shorter settling period. Both approaches eventually attain about the same voltage in steady state, but the DDBC with a GA-tuned PID controller is superior since it does so more quickly and smoothly.

Similarly, the DC-DC buck converter's output power response is displayed in Figure 7(b). With a settling time of about 0.005 seconds, the DDBC with a GA-tuned PID controller achieves the steady-state power of around 150 W much more quickly than the DDBC without a GA-tuned PID controller, which takes almost twice as long to stabilize. Additionally, during the transitory phase, the power response with GA exhibits less variation, suggesting a more effective tracking of the intended operating point. In photovoltaic applications, faster settling time is especially crucial since it allows the converter to react swiftly to changes in operating conditions and maintain steady power delivery. The DDBC with a GA-tuned PID controller offers better dynamic performance because of its faster settling time and fewer transient oscillations, even if both approaches finally reach almost the same steady-state power.

Figure 8 illustrates how the DDBC with a GA-tuned PID controller performs more steadily than the DDBC without one when solar irradiation shifts from 1000 W/m² to 300 W/m^2. The output voltage and output power of the DDBC with GA adjusted PID controller are both constant, ranging from 14.68 V at 0.025 s to 14.68 V at 0.05 s and 149.64 W at 0.025 s to 0.05 s, respectively. Without GA, the DDBC reaches 14.64 V and 148.64 W at first. However, when the irradiance lowers, the output voltage drops to 12.54 V, and the output power reduces to 109.05 W. This indicates that the decrease in solar irradiation has a greater impact on the DDBC without a GA-tuned PID controller. The DDBC with a GA-tuned PID controller is superior overall because it can more reliably sustain voltage and power in the face of fluctuating solar conditions.

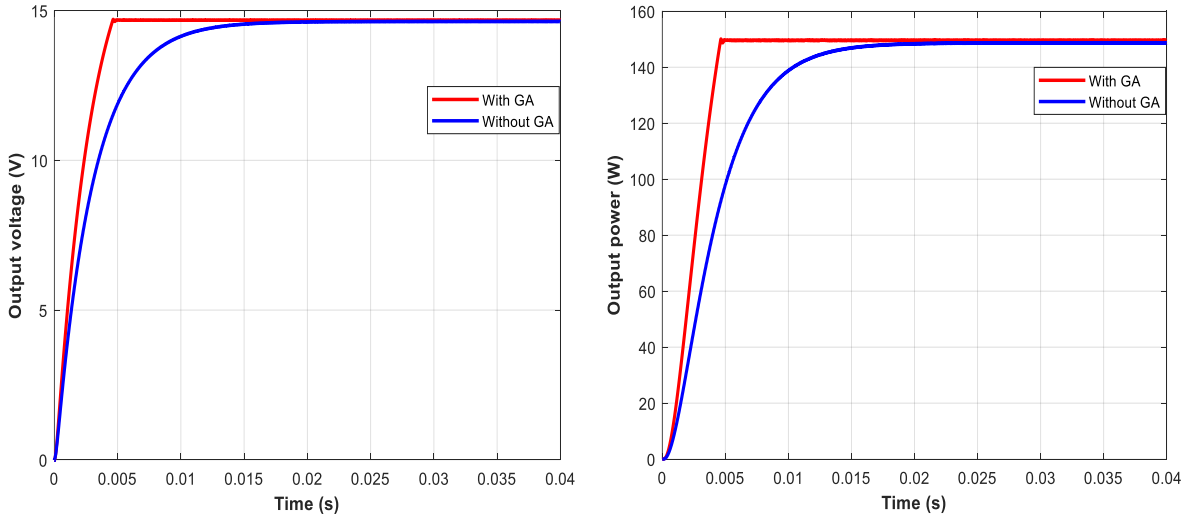

(a) (b)

Figure 7. Characteristics of DDBC at a temperature and solar irradiance of 25 °C and 1000 W/m^2, respectively: (a) output voltage and (b) output power

3.4. The effect of gain, G of GPID controller on the characteristic of DC-DC buck converter

Figure 9 shows that the transient response of the DDBC output voltage is greatly impacted by raising the gain parameter, G, of the GPID controller. The output voltage climbs smoothly toward the reference voltage with no overshoot and nearly no oscillatory behavior for lower gain settings (G = 1 and G = 5). Nevertheless, the controller becomes more aggressive as the gain rises to G = 10 and G = 15, which

causes the output voltage to respond more quickly but produces a discernible overshoot above the intended output value. This behavior happens as a result of the converter reacting more forcefully to the voltage error due to the control action being amplified by a greater gain. During the first transient period, high gain may push the system above its ideal operating point even when the settling time is shortened.

The GPID controller's gain value also affects the oscillation characteristics. The converter running with G = 1 shows the smoothest response and approaches the steady state value with very little oscillation, according to the response's magnified view. Before the output settles at about 14.7 V, little oscillations start to show up around the reference voltage as the gain increases from G = 5 to G = 15. Because of the increased control effort brought about by higher gain values, these oscillations show a decrease in system damping. Therefore, a moderate gain offers a better balance between quick voltage regulation, low overshoot, and little oscillatory behavior, resulting in a more stable and dependable DDBC characteristic, even though bigger gain values can increase the reaction speed.

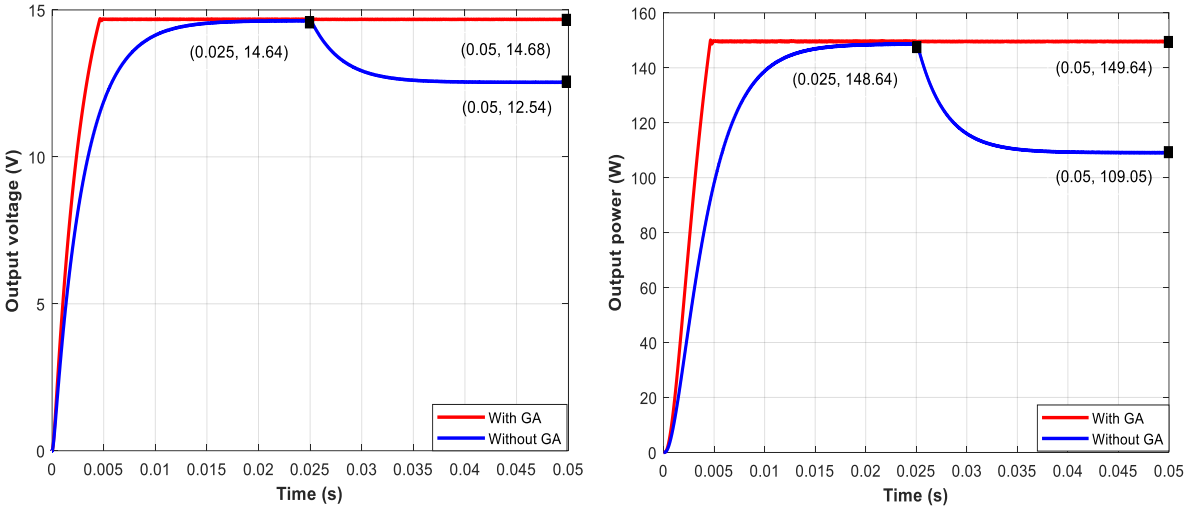

Figure 8. Characteristics of DDBC at the solar irradiance change from 1000 W/m^2 to 300 W/m^2: (a) output voltage and (b) output power

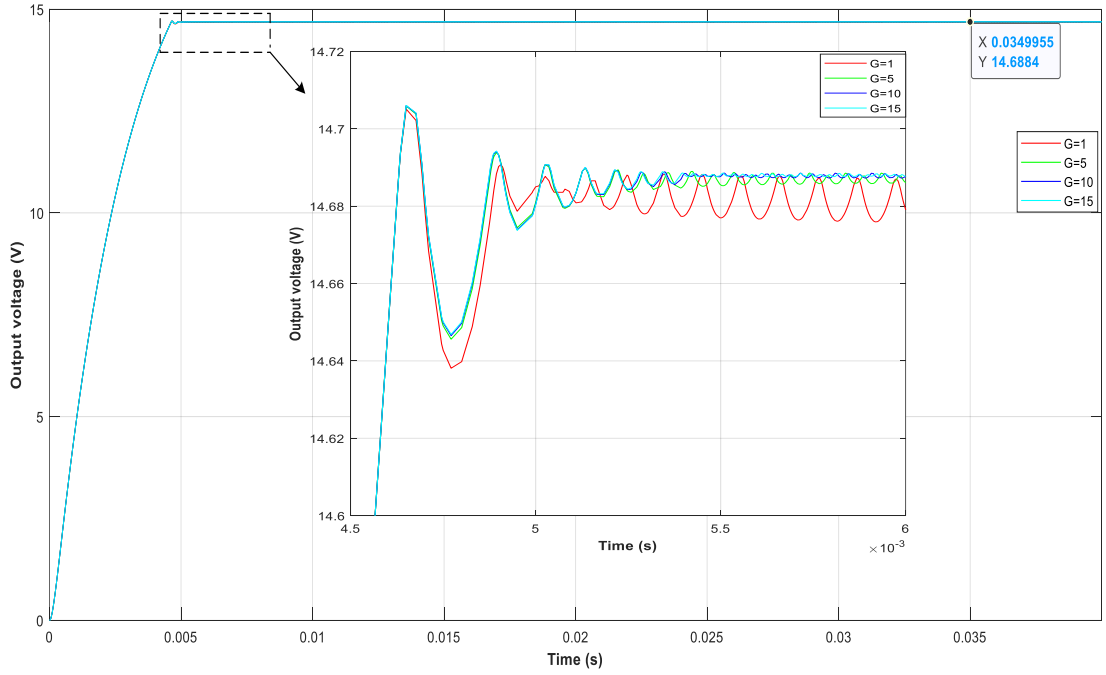

Figure 9. Effect of GPID controller gain, G on DDBC characteristics

4. CONCLUSION

This study demonstrates that solar irradiance, which directly affects the input voltage, current, and power supplied to the DC-DC buck converter, has a significant impact on the PV module characteristic. The PV module's maximum power point was around 20.4 W and 16.94 V at 25 °C and 1000 W/m². The current and output power drastically fell as the irradiance dropped from 1000 W/m² to 300 W/m². This circumstance demonstrates that in order to sustain converter performance under shifting PV input conditions, a stable and adaptive control method is required. Consequently, the DC-DC buck converter's dynamic response and stability can be enhanced by using a GA-tuned GPID controller.

The DC-DC buck converter's properties were successfully enhanced by the GA-tuned GPID controller with its parameters of the derivative gain, K_d = 100, integral gain, K_i= 12.84, and proportional gain, K_p = 100, which resulted in a quicker response, a shorter settling time, less overshoot, and a modest steady state error. The converter was able to maintain the intended output voltage of around 14.7 V according to the enhanced controller parameters acquired during GA. The regulated converter reached steady-state condition faster and more smoothly than the DDBC without a GA-tuned GPID controller. The DDBC with GA-tuned GPID controller settled in approximately 0.005 seconds under typical irradiance, whereas the DDBC without GA-tuned GPID controller needed approximately 0.01 seconds. This result proves that GA-tuned GPID controller gives a better control characteristics, especially for enhancing the output voltage and output power stability.

The GA-tuned GPID controller also showed greater resilience in sustaining the DDBC output during variations in solar irradiance. The GA-tuned GPID controller maintained a steady output voltage of around 14.68 V and an output power of approximately 149.64 W when the solar irradiance decreased. The DDBC without a GA-tuned GPID controller, on the other hand, saw a drop in output power to roughly 109.05 W and voltage to roughly 12.54 V. The gain study also demonstrates that a modest GPID gain is preferred because excessive gain might increase overshoot and oscillation, even if it may speed up the response. Overall, when the input voltage originates from a PV module, the suggested GA-tuned GPID controller is successful in enhancing the DDBC characteristics.

ACKNOWLEDGMENTS

Thank you so much for the Fundamental Research-Regular grant from the Indonesian Ministry of Education, Culture, Research, and Technology. Also, it is to express gratitude to Universiti Malaysia Perlis (UniMAP), particularly to the Center of Excellence for Renewable Energy (CERE), which works well with Universitas Prima Indonesia (UNPRI).

FUNDING INFORMATION

This research is found by the Fundamental Research-Regular grant from the Indonesian Ministry of Education, Culture, Research, and Technology, award numbers 128/C3/DT.05.00/PL-MULTITAHUN LANJUTAN/2026 and 003/K/UNPRI/III/2026.

AUTHOR CONTRIBUTIONS STATEMENT

This journal uses the Contributor Roles Taxonomy (CRediT) to recognize individual author contributions, reduce authorship disputes, and facilitate collaboration.

Name of Author	C	M	So	Va	Fo	I	R	D	O	E	Vi	Su	P	Fu
Muhammad Irwanto	✓	✓	✓	✓	✓	✓		✓	✓	✓			✓	✓
Habib Satria		✓				✓		✓	✓	✓	✓	✓		✓
Baharuddin Ismail	✓		✓	✓			✓			✓	✓		✓	
Togar Timoteus Gultom		✓				✓		✓	✓	✓	✓	✓		✓
Mawardi					✓		✓			✓				
Yoga Tri Nugraha					✓		✓			✓				

C : **C**onceptualization
M : **M**ethodology
So : **So**ftware
Va : **Va**lidation
Fo : **Fo**rmal analysis
I : **I**nvestigation
R : **R**esources
D : **D**ata Curation
O : Writing - **O**riginal Draft
E : Writing - Review & **E**diting
Vi : **Vi**sualization
Su : **Su**pervision
P : **P**roject administration
Fu : **Fu**nding acquisition

CONFLICT OF INTEREST STATEMENT

There is no conflict of interest among the authors.

DATA AVAILABILITY

The data on photovoltaic module electrical parameters that support the findings of this research are openly available in Bulletin of Electrical Engineering and Informatics, vol. 14, no. 6, pp. 4174-4188, 2025, doi: 10.11591/eei.v14i6.11044.

REFERENCES

[1] N. Kamarudin, A. A. A. Samat, M. F. N. Tajudin, M. K. Osman, S. Omar, and I. H. Hamzah, "Design of buck converter based on maximum power point tracking for photovoltaic applications," *Journal of Advanced Research in Applied Sciences and Engineering Technology*, vol. 39, no. 2, pp. 242–257, 2024, doi: 10.37934/araset.39.2.242257.

[2] R. G. Mohamed, H. M. Hasanien, and M. A. Ebrahim, "Global MPPT controllers for enhancing dynamic performance of photovoltaic systems under partial shading condition," *e-Prime - Advances in Electrical Engineering, Electronics and Energy*, vol. 9, 2024, doi: 10.1016/j.prime.2024.100638.

[3] T. Haneesh Babu K and S. A. J. Mary, "A novel two-stage data-driven framework for real-time MPPT in photovoltaic energy systems using GRU and gradient boosting regression," *Proceedings of the 6th International Conference on Smart Electronics and Communication, ICOSEC 2025*, pp. 473–480, 2025, doi: 10.1109/ICOSEC67334.2025.11459584.

[4] A. Taylor and S. M. Musa, "Evaluation of hybrid AI-based techniques for MPPT optimization," *2022 International Conference on Green Energy, Computing and Sustainable Technology, GECOST 2022*, pp. 124–128, 2022, doi: 10.1109/GECOST55694.2022.10010563.

[5] K. Y. Yap, C. R. Sarimuthu, and J. Mun-Yee Lim, "Artificial intelligence based MPPT techniques for solar power system: a review," *Journal of Modern Power Systems and Clean Energy*, vol. 8, no. 6, pp. 1043–1053, 2020.

[6] S. Masri, N. Mohamad, and M. H. M. Hariri, "Design and development of DC-DC buck converter for photovoltaic application," *2012 International Conference on Power Engineering and Renewable Energy, ICPERE 2012*, 2012, doi: 10.1109/ICPERE.2012.6287236.

[7] B. Shiva Kumar, B. M. Kunar, and R. Saida Nayak, "Maximizing power output: MPPT and buck-boost converter analysis in PV applications," *2024 International Conference on Computational Intelligence for Green and Sustainable Technologies, ICCIGST 2024 - Proceedings*, 2024, doi: 10.1109/ICCIGST60741.2024.10717579.

[8] M. Appikonda and D. Kaliaperumal, "Independent MPPT and voltage regulation of dual input DC - DC converter with a voltage multiplier cell," *Energy Sources, Part A: Recovery, Utilization and Environmental Effects*, vol. 45, no. 1, pp. 263–279, 2023, doi: 10.1080/15567036.2023.2166627.

[9] S. A. Tali and F. Ahmad, "Systematic study of maximum power point tracking methods used in photovoltaic-based systems," *Lecture Notes in Electrical Engineering*, vol. 723 LNEE, pp. 427–435, 2021, doi: 10.1007/978-981-33-4080-0_41.

[10] O. Bouketir and L. Rahmani, "A two-tier comparison study of three MPPT control algorithms for a PV-powered smart greenhouse," *Elektronika ir Elektrotechnika*, vol. 30, no. 3, pp. 62–71, 2024, doi: 10.5755/j02.eie.36878.

[11] A. Lashab, D. Sera, and J. M. Guerrero, "A dual-discrete model predictive control-based MPPT for PV systems," *IEEE Transactions on Power Electronics*, vol. 34, no. 10, pp. 9686–9697, 2019, doi: 10.1109/TPEL.2019.2892809.

[12] N. Deghfel, A. E. Badoud, F. Merahi, M. Bajaj, and I. Zaitsev, "A new intelligently optimized model reference adaptive controller using GA and WOA-based MPPT techniques for photovoltaic systems," *Scientific Reports*, vol. 14, no. 1, 2024, doi: 10.1038/s41598-024-57610-0.

[13] M. G. Hasan, M. A. Uddin, A. H. M. I. Ferdous, and M. G. Sadeque, "Enhanced maximum power point tracking using hybrid GA and PSO algorithms for solar PV systems," *Results in Engineering*, vol. 28, 2025, doi: 10.1016/j.rineng.2025.107708.

[14] M. Nyaupane, S. Adhikari, G. Gupta, and S. Tiwari, "Comparison and performance enhancement of maximum power point tracking technique for photovoltaic systems using genetic algorithm," *2024 IEEE International Conference on Power System Technology, PowerCon 2024 - Proceedings*, 2024, doi: 10.1109/PowerCon60995.2024.10870561.

[15] F. Bai and R. Qiao, "Maximum power point tracking strategy of photovoltaic system based on genetic algorithm and particle swarm optimization," *Electrica*, vol. 25, no. 1, pp. 1–12, 2025, doi: 10.5152/electrica.2025.24139.

[16] N. A. Ahmed, S. Abdul Rahman, and B. N. Alajmi, "Optimal controller tuning for P&O maximum power point tracking of PV systems using genetic and cuckoo search algorithms," *International Transactions on Electrical Energy Systems*, vol. 31, no. 10, 2021, doi: 10.1002/2050-7038.12624.

[17] A. A. Chlaihawi, "Genetic algorithm error criteria as applied to PID controller DC-DC buck converter parameters: An investigation," *IOP Conference Series: Materials Science and Engineering*, vol. 671, no. 1, 2020, doi: 10.1088/1757-899X/671/1/012032.

[18] M. A. Itaborahy Filho *et al.*, "Bio-inspired optimization algorithms applied to the GAPID control of a buck converter," *Energies*, vol. 15, no. 18, 2022, doi: 10.3390/en15186788.

[19] Y. Liu and H. Chen, "Optimization design for photovoltaic generation MPPT based on improved adaptive genetic algorithm," *UPB Scientific Bulletin, Series C: Electrical Engineering and Computer Science*, vol. 81, no. 4, pp. 241–254, 2019.

[20] M. S. Bouakkaz *et al.*, "ANFIS-based maximum power point tracking using genetic algorithm tuned fractional-order proportional-integral-derivative controller and on-site measured climatic data," *International Journal of Energy for a Clean Environment*, vol. 22, no. 4, pp. 63–82, 2021, doi: 10.1615/InterJEnerCleanEnv.2020035458.

[21] M. Sadeghi and R. Havangi, "Robust adaptive PID controller for maximum power point tracking in photovoltaic systems under uncertainty," *Solar Energy*, vol. 310, 2026, doi: 10.1016/j.solener.2026.114477.

[22] A. Ayada, D. Ounnas, D. Guiza, and N. Tidjani, "PSO-optimised PI control for DC–DC buck converters with STM32-based implementation," *International Journal of Electronics Letters*, vol. 14, no. 3, pp. 313–333, 2026, doi: 10.1080/21681724.2026.2656982.

[23] H. Rizki, F. E. Z. Lamzouri, E. M. Boufounas, A. El Amrani, and L. Bejjit, "Advanced global MPPT strategy for PV systems using high-order sliding mode control, ABC optimization, and neural network prediction under partial shading conditions," *Computers and Electrical Engineering*, vol. 127, 2025, doi: 10.1016/j.compeleceng.2025.110562.

[24] M. Irwanto, T. T. Gultom, H. Satria, B. Ismail, C. E. Panjaitan, and M. Syukri, "Parameter tuning of PIDG controller on maximum photovoltaic power point for battery charging system," *Bulletin of Electrical Engineering and Informatics*, vol. 14, no. 6, pp. 4174–4188, Dec. 2025, doi: 10.11591/eei.v14i6.11044.

[25] R. W. Erickson and D. Maksimović, *Fundamentals of power electronics*. New York: Chapman and Hall, 2001, doi: 10.1201/9780203913468.ch2.

BIOGRAPHIES OF AUTHORS



Muhammad Irwanto received his Ph.D. degree in electrical systems engineering from Universiti Malaysia Perlis (UniMAP), Malaysia, in 2012. He is currently a researcher at the Center of Excellence for Health Based on IoT and Renewable Energy, Department of Electrical Engineering, Faculty of Science and Technology, Universitas Prima Indonesia (UNPRI). He is also a fellow of the Centre of Excellence for Renewable Energy (CERE), Faculty of Electrical Engineering and Technology, Universiti Malaysia Perlis (UniMAP). His research interests include power electronics, electrical power system stability, solar energy, and photovoltaic applications. He can be contacted at email: muhammadirwanto@unprimdn.ac.id or irwanto@unimap.edu.my.



Habib Satria received his master's degree in electrical engineering from Universitas Andalas, Indonesia, in 2018. He is currently a lecturer in the Department of Electrical Engineering, Universitas Medan Area, Indonesia. His research interests include new and renewable energy, particularly solar power plants, automatic control systems, the internet of things (IoT), real-time simulation, green computing, pattern recognition, and power systems. He is a member of the International Association of Engineers (IAENG) and the Institution of Engineers Indonesia. He can be contacted at email: habib.satria@staff.uma.ac.id.



Baharuddin Ismail received his Ph.D. degree in electrical system engineering from Universiti Malaysia Perlis (UniMAP), Malaysia, in 2015. He is currently a lecturer in the Faculty of Electrical Engineering and Technology, Universiti Malaysia Perlis (UniMAP). He is also a fellow of the Centre of Excellence for Renewable Energy (CERE), Faculty of Electrical Engineering and Technology, Universiti Malaysia Perlis (UniMAP). His research interests include power electronics and renewable energy systems. He can be contacted at email: baha@unimap.edu.my.



Togar Timoteus Gultom received his master's degree in electrical engineering from Institut Sains dan Teknologi Nasional, Jakarta, Indonesia. He is a lecturer in the Department of Electrical Engineering, Faculty of Science and Technology, Universitas Prima Indonesia (UNPRI). He is actively involved in biomedical engineering, particularly in the maintenance and repair of biomedical devices. His research interests include power system analysis, electrical machines, and transformers. He can be contacted at email: togartimoteusgultom@unprimdn.ac.id.



Mawardi received his doctoral degree in mechanical engineering from the University of North Sumatra in 2023, specializing in energy conversion. His doctoral dissertation examined the effect of a Cu-Sn heat exchanger shell and tube on steam pressure in ocean thermal energy conversion (OTEC) power plants. He has expertise in mechanical engineering, particularly as an associate expert in plumbing engineering. He has been active in academia and has served as Dean of the Faculty of Engineering at Al-Azhar University, Medan, since 2019. He can be contacted at email: mawardi.ipc@gmail.com.



Yoga Tri Nugraha received his master's degree in electrical engineering from Universitas Muhammadiyah Sumatera Utara (UMSU), Indonesia, in 2019. He is currently a researcher and lecturer in the Department of Electrical Engineering, Universitas Al-Azhar Medan. His research interests include electrical engineering, electronic engineering, communication engineering, mechatronics, artificial intelligence, and power systems. He can be contacted at email: yogatrinugraha16@gmail.com.