International Journal of Power Electronics and Drive System (IJPEDS)
Vol. 17, No. 4, December 2026, pp. 2427~2439
ISSN: 2088-8694, DOI: 10.11591/ijpeds.v17.i4.pp2427-2439

Fuzzy logic controller-based bidirectional DC–DC converter for regenerative braking in electric vehicle applications

Amruta Yelsatti[1], Vilaskumar Patil[2]
[1]Department of Electrical and Electronics Engineering, Faculty of Engineering and Technology (Exclusively for Women), Sharnbasva University, Kalaburagi, India
[2]Department of Electrical and Electronics Engineering, Faculty of Engineering and Technology, Sharnbasva University, Kalaburagi, India

Article Info

Article history:

Received Jun 30, 2026
Revised Aug 8, 2026
Accepted Sep 17, 2026

Keywords:

Brushless DC motor
Electric vehicle
Fuzzy logic controller
MATLAB/Simulink
Regenerative braking

ABSTRACT

Advanced power conversion and control techniques are required to improve performance and energy recovery, given the growing need for energy-efficient electric vehicles (EVs). This paper presents the design of a bidirectional DC-DC converter based on a fuzzy logic controller (FLC) for regenerative braking applications in electric vehicles. The suggested converter operates in two modes: regenerative mode, which recovers braking energy and feeds it back into the battery to improve overall energy efficiency, and driving mode, which uses the battery to power the motor. To ensure optimal voltage and current regulation across a range of load and speed conditions, FLC is trained to dynamically adjust the duty cycle of the converter switches. FLC is more flexible, responds more quickly in transient situations, and is more effective during mode changes than traditional PI control. According to the simulation results, system robustness, battery-charging stability, and energy-recovery efficiency have all significantly improved. The suggested method offers a clever and practical way to regulate EV power sustainably, thereby increasing driving range and reducing energy losses.

This is an open access article under the CC BY-SA license.

Corresponding Author:

Amruta Yelsatti
Department of Electrical and Electronics Engineering, Faculty of Engineering and Technology (Exclusively for Women), Sharnbasva University
Kalaburagi, India
Email: aks.yelsatti@gmail.com

1. INTRODUCTION

Increased car use has impacted local pollution. Recently, electric vehicles (EVs) have gained popularity as an alternative to non-renewable internal combustion (IC) engines [1], [2]. Many electric automobiles employ brushless direct current (BLDC) motors due to quiet operation, compact size, reliability, little maintenance, and great efficiency. Hub-type BLDCs are used in most EVs because they reduce hardware weight and space, and the inverter acts as an electronic commutator. Battery-powered electric automobiles [3]. Tesla Motors has a 100-kilowatt-hour model with a 335-mile range, while conventional electric cars have 24 kWh packs with 80 miles. Charge time is also longer. So, the only solution to increase electric car driving range without charging is to increase battery size [4]. Increased battery size increases vehicle weight. The optimum solution is BLDC motor regenerative braking. A typical internal combustion engine car brakes by converting kinetic energy into thermal energy, a wasteful process. Regenerative-braking EVs charge the battery. The vehicle's inertia turns the motor into a generator to charge the battery [5]. During braking, regenerative braking leverages motor back electromagnetic field (EMF). Use back EMF to

charge the battery during regenerative braking. Even at maximum speed, the battery voltage exceeds the back EMF [6]. A DC-DC converter is needed to increase voltage. This increases costs and losses, reducing system efficiency [7]. A simple and inexpensive method for enhancing back EMF is suggested. Energy regeneration may damage batteries in real-world applications due to the high surge current [7]-[9]. To protect the battery during energy regeneration, limit the current simply. Develop a MATLAB simulation model of the suggested procedure first. The rise of EVs makes energy management crucial. Using regenerative braking systems to recapture kinetic energy improves vehicle economy. In nonlinear operating situations, parameter uncertainties, and rapid load changes, proportional-integral (PI) and sliding-mode controllers in bidirectional DC-DC converters perform poorly. Even though model predictive control and PI controllers have been studied to improve system robustness, they require complex tuning and more processing power. The precise, adaptive, and real-time management of bidirectional power flow in regenerative braking remains a fundamental drawback [10].

To overcome this problem, this paper proposes an fuzzy logic controller (FLC)-based control of a bidirectional DC-DC converter for EV applications. The FLC is trained with several practical data sets, which enable it to accurately capture the system nonlinearities and generate optimal control signals for both buck, boost operation modes. The application of FLC provides better dynamic response, better energy-recovery efficiency, and better stability than traditional methods. This proposed method helps advance intelligent control in power electronics for electric vehicles. As a result, it improves battery performance, extends driving range, and supports development of sustainable, energy-efficient transportation systems. Current regenerative braking systems are usually implemented with fixed-gain PI/PID controllers that may lead to poor performance under nonlinear operating conditions, low energy recovery efficiency, high sensitivity to parameter variations, battery overcurrent during sudden braking, and lack of DC-link voltage regulation. The proposed fuzzy logic controller overcomes these limitations with adaptive rule based control, which improves energy recovery, battery protection and converter performance.

This work presents a novel bidirectional DC-DC converter that uses fuzzy logic controllers to intelligently manage the energy produced by electric vehicles' regenerative braking systems. In very nonlinear and dynamic driving conditions, the suggested controller can provide smooth brake operation while simultaneously maximizing energy recovery, regulating the DC-link voltage, protecting the battery from charging stress, and so on. Compared to traditional PI/PID-based regenerative braking systems, the suggested adaptive control approach offers better dynamic performance, resilience, converter efficiency, and battery longevity; thus, it is an excellent choice for energy management systems in next-generation EV's.

2. LITERATURE REVIEW

EV regenerative braking systems use bidirectional DC–DC converters with many management techniques. Traditional controls are simple but struggle with nonlinear dynamics, while intelligent and optimization-based controllers improve performance but increase computational complexity. To support FLC, a comparison of important control methods is shown below. The simple structure, implementation, minimal computing requirements, and industrial durability of the PI controller make it popular for DC-DC converters and regenerative braking systems in EV's. Kannan *et al.* [11] and Martinez-Vera and Banuelos-Sanchez [12] found that PI controllers can manage DC-link voltage and perform well under normal operating conditions. The extremely nonlinear power converters, battery state of charge (SOC), and fast-changing regenerative braking torque exceed PI controllers' fixed gain settings. Thus, PI-based controllers have poor transient performance, increased voltage overshoot, and reduced energy recovery efficiency under dynamic driving. Thus, adaptive intelligent control should automatically adjust controller parameters in real time to maximize regenerative energy recovery and system stability in diverse operating conditions. Adaptive control techniques alter controller gains based on system dynamics to overcome fixed-parameter controller restrictions. The self-tuning increases transient response and voltage regulation over typical PI controllers. Adaptive control methods use well-established adaptation concepts and technically demanding stability calculations, but online parameter estimates and system identification are computationally intensive and limit their usage in low-cost embedded EV controllers. Thus, future research should focus on computationally efficient adaptive control algorithms with minimal system modelling and robust real-time implementation. Neural network (NN)-based control algorithms are popular for regenerative braking due to their nonlinear approximation and self-learning. NN controllers can change braking force distribution for greater regeneration energy recovery and stability. Other studies show this, including fuzzy neural network-based regenerative braking (2024). They are useful for advanced electric vehicle energy management systems because they can learn complex nonlinear relationships. These methods require a large training data set, are computationally costly, and can overfit with biased or small data. Also tough are neural network interpretability and real-time deployment. Thus, future work should improve online learning, simplify

computation, and ensure reliability in novel driving circumstances. Model predictive control (MPC) is an advanced control technology for predictive optimization and dynamic performance. Kalaichelvan *et al.* [13] and other review studies found that MPC enhances transient responsiveness, multivariable control, operational constraints, DC-link voltage management, and regenerative braking torque allocation. MPCs are appropriate for modern electric vehicles because of these features. MPC requires correct converter and vehicle dynamics mathematical models, and online optimization increases computational cost. Implementation on cheap automotive controllers is difficult. Thus, future research should develop lightweight prediction algorithms that are robust to modelling uncertainty and real-time implementation limits while reducing computing cost. Since it can handle nonlinear and variable operating conditions without a solid mathematical model, FLC is a promising intelligent control strategy for regenerative braking systems. Luo *et al.* [14] state that rule-based decision-making improves FLC's robustness against parameter changes, smooth regenerative braking performance, reduced overshoot, battery charging safety, and converter efficiency. Fuzzy controllers support advanced EV applications since they can readily adjust control rules. Conventional FLC performance depends on membership function design and expert-defined rules. These parameters are normally chosen manually. Therefore, conventional FLC cannot automatically optimize and may not be ideal for different driving scenarios. Thus, adaptive learning and optimization with fuzzy logic control should autonomously adjust membership functions and control rules to improve regenerative energy recovery, battery health, and converter efficiency in future studies.

The proposed FLC-based bidirectional DC-DC converter addresses these limits. An explicit mathematical model is not needed for its adaptive rule-based decision mechanism. It controls DC-link voltage, battery charging current, regeneration energy recovery, braking smoothness under various driving conditions. The suggested controller beats PI, adaptive, neural network, and MPC approaches in control performance, robustness, implementation simplicity, and computational efficiency, making it perfect for real-time electric vehicle regenerative braking.

3. METHOD

3.1. Working of BLDC motor

The rotor of BLDC motor (BLDCM) is composed of permanent magnets, stator is constructed using three-phase windings, much like an induction motor. This machine's back emf has a trapezoidal shape. The inverter functions as an electronic commutator, achieving commutation by regulating the order in which the inverter switches conduct [15]. Finding the rotor's location is crucial for controlling the BLDC motor. One way to find this out is to use Hall-effect sensors. Typically, a BLDC motor contains three Hall-effect sensors spaced 120 degrees apart [16]. The sensor indicates a HIGH logic state whenever the rotor goes through it. If not, it remains in the LOW logic state. Every cycle, every sensor is operational for 180 degrees

Figure 1(a) illustrates how phase voltage changes in response to hall sensor states and how the generated back EMF has a trapezoidal shape. The rotor is rotated by energizing the stator coils in accordance with the location of the rotor, which is determined by employing hall effect sensors. The locations of the BLDCM's rotor and stator coils are displayed in Figure 1(b). Every 60 degrees, the output from hall effect sensors is recorded. There are six stages in a full rotation [17], [18]. The motor is sequentially energized by the opposing pole pairs to sustain rotation once it has started. There is simultaneous energization of two coils.

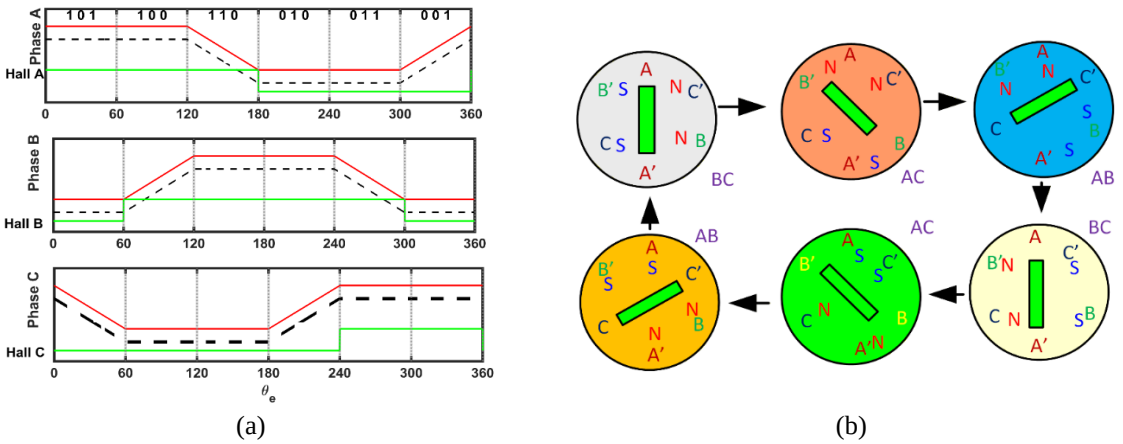

(a) (b)

Figure 1. Operations performed by BLDC motors: (a) signals from phase and hall sensors and (b) BLDC motor commutation technique

3.1.1. Normal mode or motoring mode

BLDC motors are often controlled by H-Bridge inverters. The relevant switches must be switched ON to energize the windings and enable the rotor to rotate. Phases A and B should be turned on, while phase C is in a floating condition, within the range of 0 to 60 degrees of Figure 1(a). Thus, S1 and S2 in Figure 1(b) need to be turned ON in order to turn on the A and B phase coils. The inverter should not have two switches on the same leg turn on simultaneously. Simultaneous activation of the top switch on one leg and the bottom switch on the other is required. All six of the inverter's switches are active when it is in motoring mode. The controller generates the pulse width modulation (PWM) using the hall sensor states as a reference.

Figure 2 depicts the model for a comparison study of the regenerative braking of BLDC motors using an FLC. A voltage-source inverter (VSI) here uses Hall-effect sensors to determine the rotor's position and thereby powers a brushless DC motor. After that, the appropriate circuitry is used to transform signals received from hall effect sensors into pulses [19]. The first thing that happens when you press a virtual brake pedal is that gate pulses are generated using data from hall sensors. While the top leg switches keep receiving pulses from hall sensor, the bottom leg switches use PWM switching in response to the brake pedal being pushed. The windings of the motor also double as boosting inductors when the motor is equipped with the appropriate boost electronics and switched on. With the PWM switch, the regenerated voltage can now be sent back to its source. With the voltage, you can recharge and go back to where you came from [20]. For current regulation of the battery, the PI controller makes use of the FLC output. The current flowing through the battery is modulated by comparing the PI controller's output with a recursive sequence that generates pulses for PWM. The output of the while logical operator is 1, and the input of the OR operator is 1, 0, resulting in 1. As a result, the PWM switch now provides gate pulses for the lower leg switches, and the signals from hall effect sensors provide suppressed gate pulses, enabling boosting. When the brake is applied, energy is collected and stored in the battery. At the same time, the buck converter charges the battery.

3.1.2. Regenerative braking mode

Regenerative braking involves cutting off the motor's power source and sending the motor's stored kinetic energy back to the battery to charge it. The motor should switch from regular (or driving) mode to regenerative braking mode if the microcontroller detects a brake signal. This can be altered simply by altering the inverter's switching logic. When the vehicle is in regenerative braking mode, the battery is charged by current flowing from the motor to the battery through back EMF. Usually, back EMF is lower than battery voltage. The motor windings' inductance feature is employed to increase back EMF. This eliminates the requirement for a second boost converter with a large inductor. Currently, the inductor's stored energy and back EMF work together to provide a voltage source to charge the battery [21]. The main difference between motoring and regenerative braking modes' switching logic is that the inverter's bottom switches are engaged in regenerative braking. The inverter's upper switches are never activated. In order to create a closed path for current and raise the inductor voltage during regeneration, one of the inverter's bottom switches is immediately turned ON after applying the brake, as shown in Figure 3(a). When the voltage in the motor is higher than the voltage in the battery, as shown in Figure 3(b), current starts to flow through the MOSFET body diodes to charge the battery.

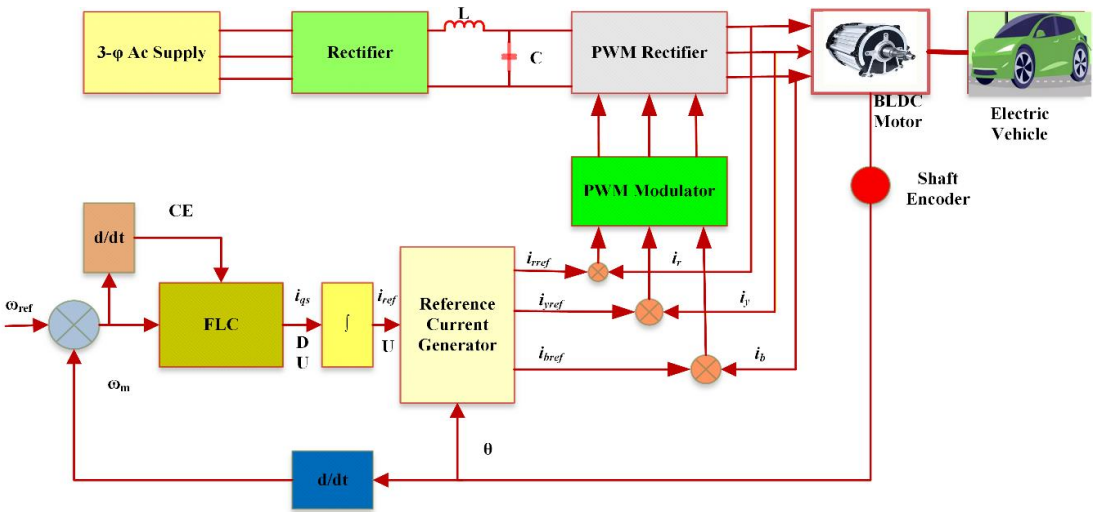

Figure 2. Block diagram configuration of proposed work

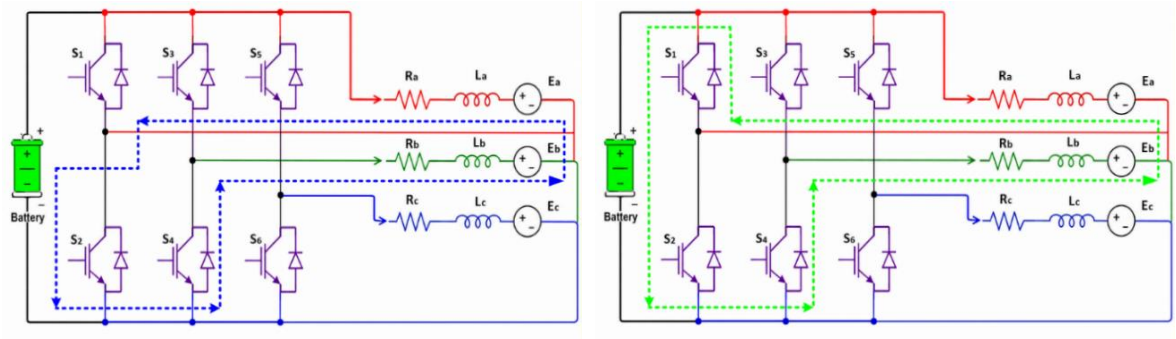

(a) (b)

Figure 3. Current during regenerative braking: (a) current to charge the inductor and (b) current to charge the battery

4. BIDIRECTIONAL DC-DC CONVERTER

4.1. Non-isolated bidirectional DC-DC converter topology

The article discusses a prototype DC-DC converter for regenerative braking in an independent-wheel motor dual-axis (IWM-DA) light electric car. One way to make bidirectional converters from unidirectional DC-DC converters is to use bidirectional conducting switches, which improve the original converters' unidirectional conduction capabilities. An example of a non-isolated bidirectional DC-DC converter would be an anti-parallel buck-boost converter [22]. This is an essential part of devices and systems that use medium power. The problem with the converter is that in order to work at higher voltages, each switch needs a lot of power. Voltage and current are the control variables. A non-isolated buck-boost bidirectional converter with FLC is shown in Figure 4(a) [18].

The converter functions in two fundamental modes: boost mode, which transfers energy from the regenerating motor to the energy storage component, and buck mode, which transfers energy from the energy source to the motor. The control system consists of MOSFET drivers, feedback amplifiers, voltage and current sensors, and controllers. It's crucial to predict the converter's performance in situations when other system components don't regularly fail or when unforeseen events occur, in addition to power factors like currents and voltages, switching durations, and circuit-to-circuit switching periods. These conditions are: i) limitations on battery life and power, ii) a four-section converter, iii) inverter: every procedure is in sync with the converter, and iv) the motor is overheating or has a clogged brush or magnet [23]. The processes that occur during converter operation can be characterized by the various states shown in Figure 4(b).

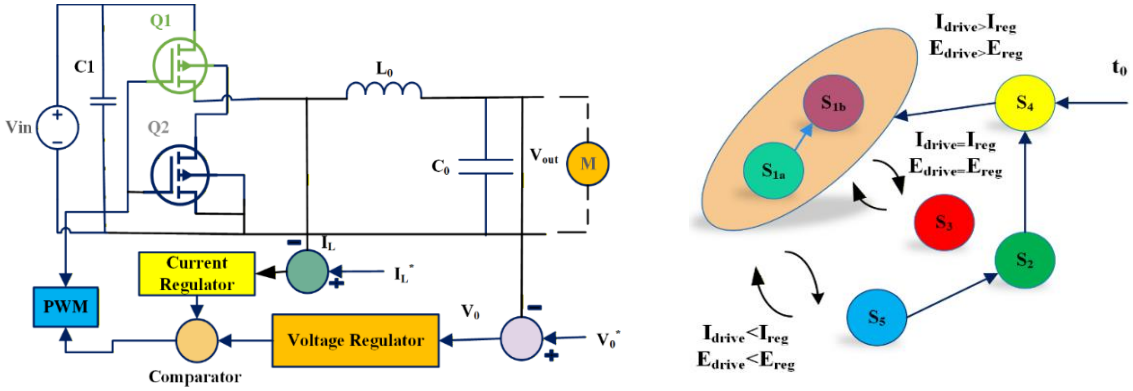

(a) (b)

Figure 4. Configuration and operating states of the bidirectional DC–DC converter: (a) non-isolated buck–boost bidirectional DC–DC converter and (b) relationship between the operating states of the bidirectional DC–DC converter

The degree of voltage and current stress is determined by the power of input-output units. There are normally four modes of operation for converter: i) When the electric motor gets power from the voltage source and the car starts to move, this is known as State 1, or S1; ii) When the converter is off, it is in state 2,

or S2; iii) When it is in standby mode and waiting for the driver device to switch it to running mode, it is in State 3, or S3; iv) State 4, also known as S4, is the start-up state, which happens when vehicle's electrical system is activated, control signals are set up to activate converter, track sensor signals; and v) When vehicle comes to a complete stop, the motor enters State 5, or S5, and starts generating electricity. These five modes describe the system's on-board behavior and the many stages the vehicle might go through. When power is supplied by a regenerative motor, the converter acts as a boost converter; when it receives power from the DC bus or battery, it acts as a buck converter [24].

The (1)-(3) describe the bidirectional converter's nonlinear dynamic behavior.

$$\frac{di_L}{dt} = \frac{V_{c1}}{L}(1 - S) - \frac{V_{c2}}{L} \tag{1}$$

$$\frac{dv_{c1}}{dt} = \frac{I_{in}}{C_1} - \frac{I_L}{C_1}(1 - S) \tag{2}$$

$$\frac{dv_{c2}}{dt} = \frac{I_L}{C_2} - \frac{Vc_2}{C_2 R_0} \tag{3}$$

Where i_a stands for inductor current, i_{in} for input current, v_{c1} for C1 capacitor voltage, v_{c2} for C2 capacitor voltage, and R_0 for output resistance [25]. The following elementary equations characterize the MOSFET's switching performance:

$$I_g = \left(C_{gs} + C_{gd}\right)\frac{dv_{gt}}{dt} \tag{4}$$

Where V_{gs} is the voltage between the gate and source; C_{gs} is the capacitance between the gate and source; C_{gd} is the capacitance between the gate and drain [11].

$$V_{gs} = V_{Gs}(1 - e^{\frac{-t}{R_{gx}(C_{gs}+C_{gd})}}) \tag{5}$$

5. CONTROL STRATEGY

Conventional PI controllers struggle with nonlinear behavior, frequent mode changes observed in bidirectional DC–DC converters used in EV regenerative braking systems. PI controllers are linear and based on fixed gains, so they cannot maintain optimal performance in different operating conditions. This frequently results in steady-state errors, slow transients, and oscillations during sudden buck/boost transitions. Moreover, their efficiency is degraded under parameter uncertainties and variations in battery/load characteristics requiring frequent retuning. The benefits of model predictive control in terms of adaptability are very dependent on the heuristic rules that are developed, and both are currently lacking in systematic optimization and scalability. Moreover, MPC can show delayed reactions and reduced accuracy when exposed to fast mode transitions, as they do not have the ability to learn and generalize based on system dynamics. Therefore, neither PI controllers nor MPC are suitable for providing precise, stable, and efficient control in environments that are highly dynamic and nonlinear.

5.1. Design of conventional FLC

Each component of driving a BLDC motor, voltage source inverter, hall sensor FLC speed controller, and hysteresis current controller works together to form a whole. The FLC takes two parameters, error (e), change in error (ce), as inputs. The formulas for $e(k) = v_{ref}(k) - \omega_m(k)$ and $ce(k) = e(k) - e(k-1)$ are standardly used. The membership functions for the normalized domain are defined as [−1, 1] for controller inputs e, ce. The actual control output is obtained by the defuzzification process, which allows one to gain the crisp output. According to the existing research, FLC performance is impacted by the parameters used for the MF. By fine-tuning these parameters, FLC's performance can be improved [26]. The best method for adjusting the parameters of the membership function (MF) is detailed in the section that follows. The entry point for FLC is error (v_{ref} - ω_m), operational foundation for the FLC is the modification of the error. To get the best possible PI values, the FLC uses fuzzy logic principles to make online adjustments to the controller settings while it continually measures and calculates inputs [27]. The adaptive fuzzy PI controller's FLC inputs may allow error, change in error, and output to meet PI self-calibration requirements at different periods [28]. Figure 5 displays the FLC block diagram. The input variables error and change in error are represented by membership functions in Figure 6. As depicted in Figure 7, output membership functions are created.

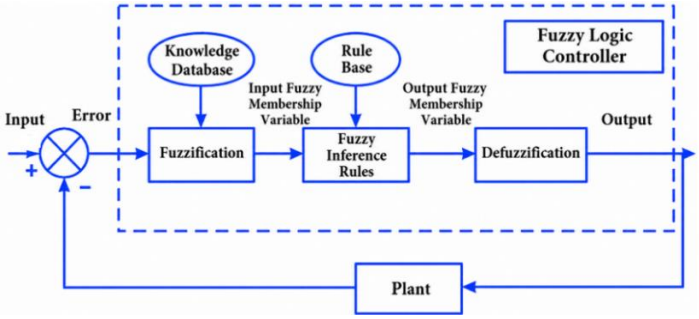

Figure 5. Block diagram of fuzzy logic controller

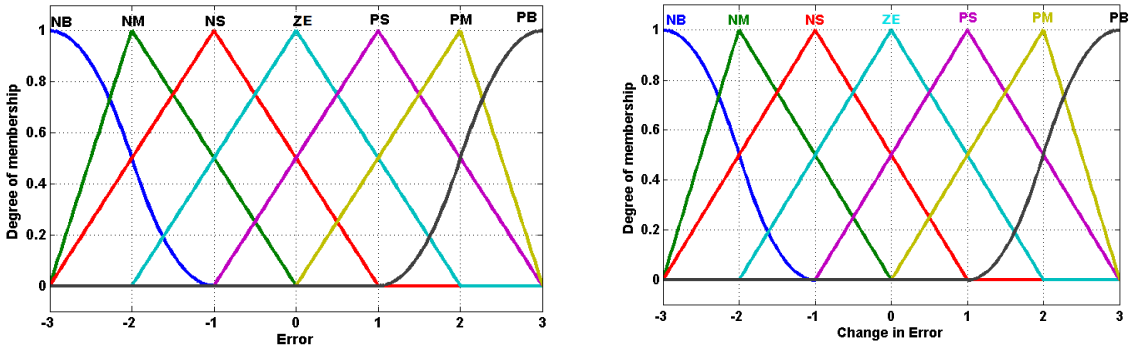

(a) (b)

Figure 6. Membership functions of (a) error and (b) change in error

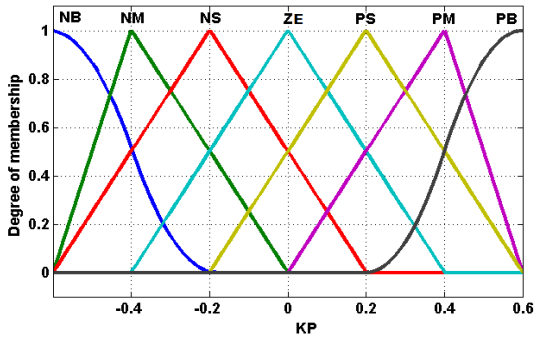

Figure 7. Membership functions of output

The membership functions for all fuzzy variables are negative big (NB), negative medium (NM), negative small (NS), zero (ZE), positive small (PS), positive medium (PM), and positive big (PB). Pulse width modulation switching strategies are governed by the vehicle's strategic level and mode of BDC, as shown in Figure 8, which shows the comparison between the estimated inductor currents (iLm and iLa) and the reference converter currents. Here, the controller learns the vehicle's status from its various voltage sources (VFVS, VSVS) and driving states of power demand (PDem). Next, appropriate current references (iLmRef or iLaRef) are chosen to control power switches (Sw, M1, M2, M3, and M4) using FLC. Methods for PWM switching convert the duty cycle into controlled gate signals that are sent to the active switches (Sw, M1, M4) and the switch selectors (S1, S2) of the BDC controller [29].

The rectifier and DC link capacitor are controlled by the first of the FLC's two output signals, which regulates voltage levels. The second signal controls the charging current from the BBC. The calculation of the error between the current and desired DC link voltages was the most crucial metric identified when utilizing the FLC technique in BCS. The phase shift angle represents the computed error and is then sent to the FLC training system for further computation. Figure 8 shows the FLC-based BCS configuration. The input is supplied to the FLC via the DC-link voltage and charging current. Table 1 represents the rule table for the design of fuzzy inference rules for the proposed system.

Figure 9 represents the control diagram of an FLC-based bidirectional DC-DC converter. The FLC control system for a bidirectional DC–DC converter used in EV regenerative braking continuously monitors key parameters. These include input voltage, battery voltage, inductor current, SOC, and vehicle speed or braking signal. These parameters are input to the controller, along with a reference current derived from the operational mode, whether motoring or braking. Subsequently, the error between the reference and actual current, along with its rate of change, is calculated and supplied to the FLC. This FLC serves as the central intelligent controller, processing these inputs to produce an optimal duty cycle signal. This duty cycle is then transformed into switching pulses by the PWM generator, which governs power electronic switches of the bidirectional DC–DC converter. This enables the converter to function in boost mode during motoring (when the battery supplies power to the motor) and in buck mode during regenerative braking (when the motor returns energy to the battery). Furthermore, a feedback loop continuously updates the system with real-time output measurements, thereby ensuring stable, accurate, and adaptive control across diverse operating conditions. Consequently, this approach yields improved efficiency, faster dynamic response, and enhanced energy recovery compared with conventional controllers.

Table 1. Rule table

E / ΔE	NB	NM	NS	ZO	PS	PM	PB
NB	NB	NB	NB	NM	NM	NS	ZO
NM	NB	NB	NM	NM	NS	ZO	PS
NS	NB	NM	NM	NS	ZO	PS	PM
ZO	NM	NM	NS	ZO	PS	PM	PM
PS	NM	NS	ZO	PS	PM	PM	PB
PM	NS	ZO	PS	PM	PM	PB	PB
PB	ZO	PS	PM	PM	PB	PB	PB

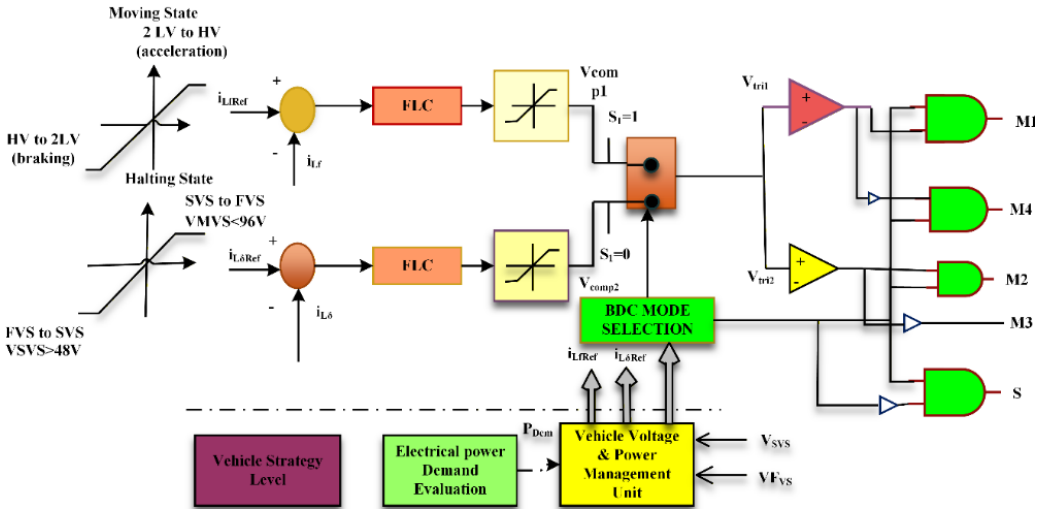

Figure 8. Block diagram for feedback loop control technique

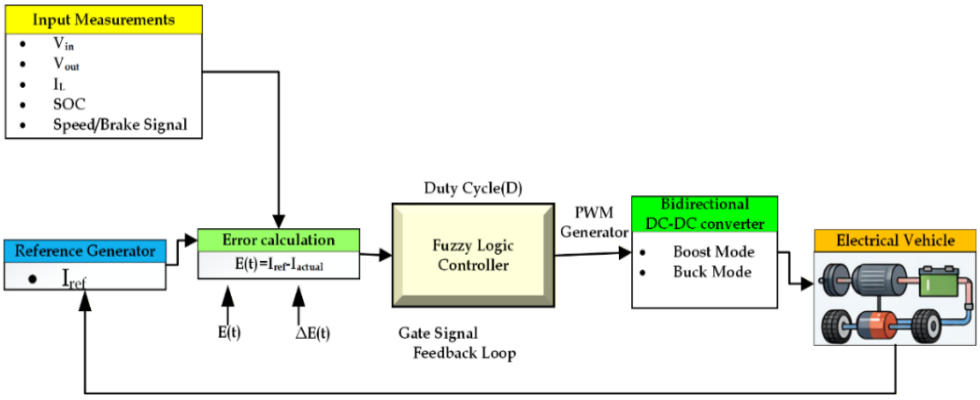

Figure 9. Control diagram of an FLC-based bidirectional DC–DC converter

6. SIMULATION RESULTS

It compares PI and fuzzy, while regenerative braking. Use MATLAB/Simulink to get values of the FLC controller parameters shown in the results. The buck converter charges the battery and increases the regenerative energy stored in it when the brake pedal is pressed. These are confirmed by the simulation results. The BLDC motor is initially set to 1000 rpm, and the FLC controller reaches the target value in less time following the regenerative braking phase. In Figures 10(a) and 10(b), the results of a time-contradictory PI controller and the FLC controller are shown. As shown in Figure 10, the speed characteristics of the PI and FLC controllers are compared. Figure 11 shows a time-versus-electromagnetic-torque graph with the suggested controllers. To improve the electromagnetic torque response, an FLC is used. All three phases of the BLDC motor's stator—"a," "b," "c"—are responsible for producing the motor's back-EMF signal. The BLDC motor's back-EMF curve narrowed when the battery is used as a load during regenerative braking. A 75 V phase voltage and 150 V phase-to-phase voltage were detected in the recorded back-EMF. As shown in Figure 12, back EMF of the three phases is plotted as a function of time. Using an FLC controller instead of a traditional PI controller will result in faster response times for the BLDC motor's back EMF signal in each phase. In a similar vein, FLC allows for a considerably quicker rate of current and power settlement in batteries. Figure 13 depicts Simulation results of current with Figure 13(a) PI and 13(b) fuzzy. In Figure 14, we can see the Hall-effect results and the saturation percentage. During regenerative braking, the graph shows a maximum current of 2.68 A and a maximum power of 483.65 Wand in Figure 15(a), and Figure 15(b) shows the results of battery voltage, current, and power. Figure 16 shows a time-series graph of the current and power drawn from the battery.

Table 2 gives the parameter specification for the proposed work. Table 3 depicts FLC demonstrates superior dynamic performance compared to PI controller, offering faster tracking, negligible overshoot, reduced speed deviation during disturbances, and quicker recovery, resulting in enhanced speed regulation and system stability. The fuzzy logic controller provides superior voltage regulation by effectively suppressing transient oscillations and limiting voltage excursions during both startup and disturbance conditions is shown in Table 4. Compared with the PI controller, the fuzzy controller reduces the peak voltage magnitude from approximately ±100 V to ±20 V, corresponding to an 80% reduction in voltage stress. Furthermore, the fuzzy controller demonstrates faster recovery following the disturbance at 0.5 s and maintains a smoother voltage profile with improved stability. These characteristics contribute to enhanced dynamic performance, better power quality, and reduced stress on power electronic components.

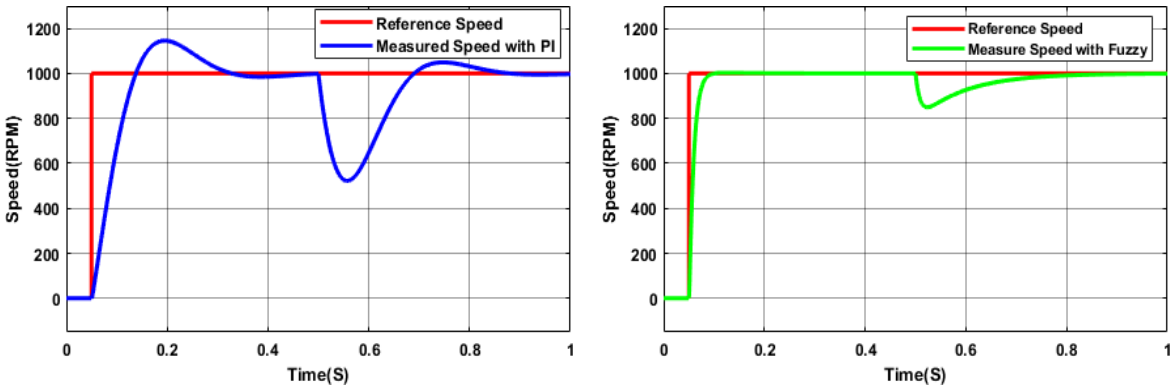

Figure 10. Results of (a) speed with PI controller and (b) speed with fuzzy logic controller

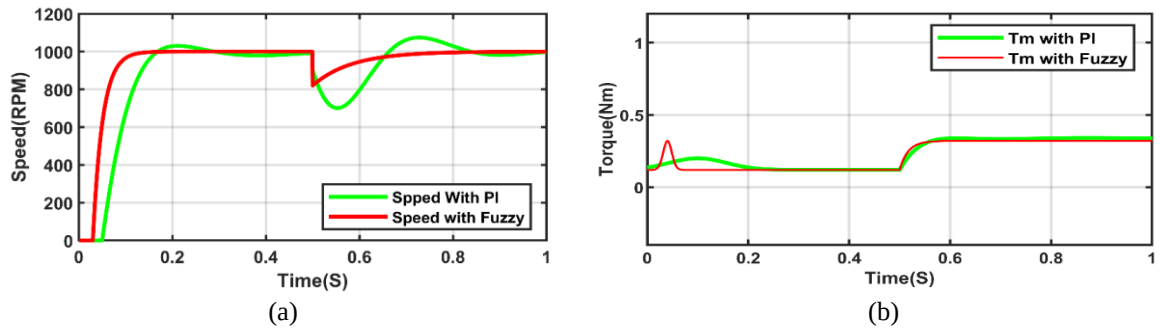

Figure 11. Comparison of torque characteristics with (a) PI and (b) fuzzy

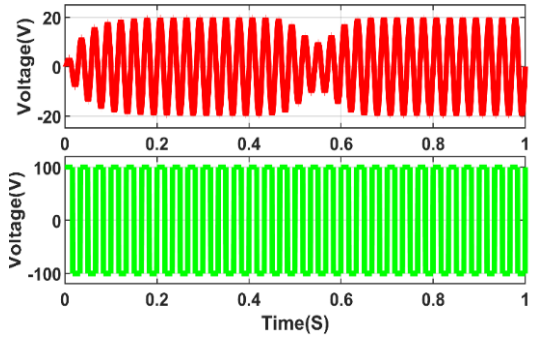

Figure 12. Results of back EMF with PI and fuzzy

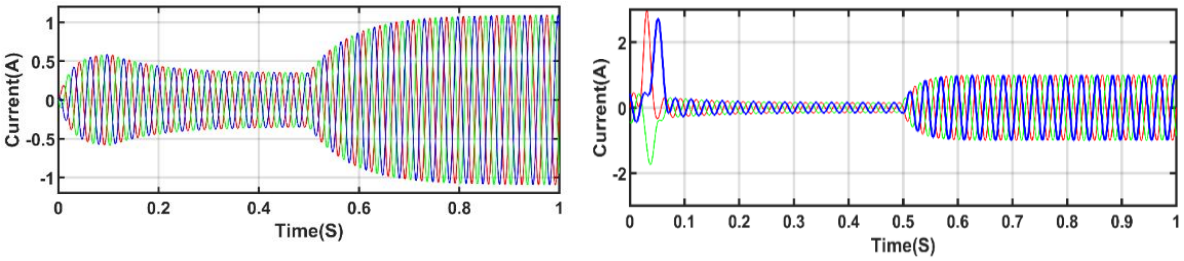

(a) (b)

Figure 13. Results of current with (a) PI and (b) fuzzy

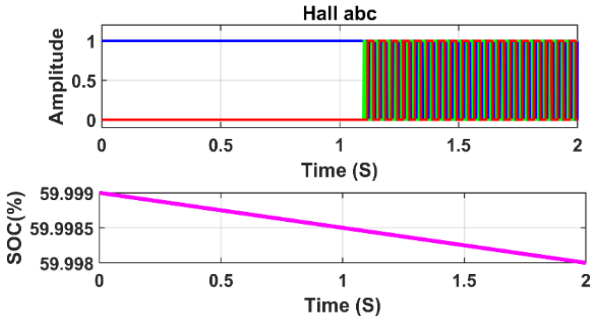

Figure 14. Results of hall effect and %SOC

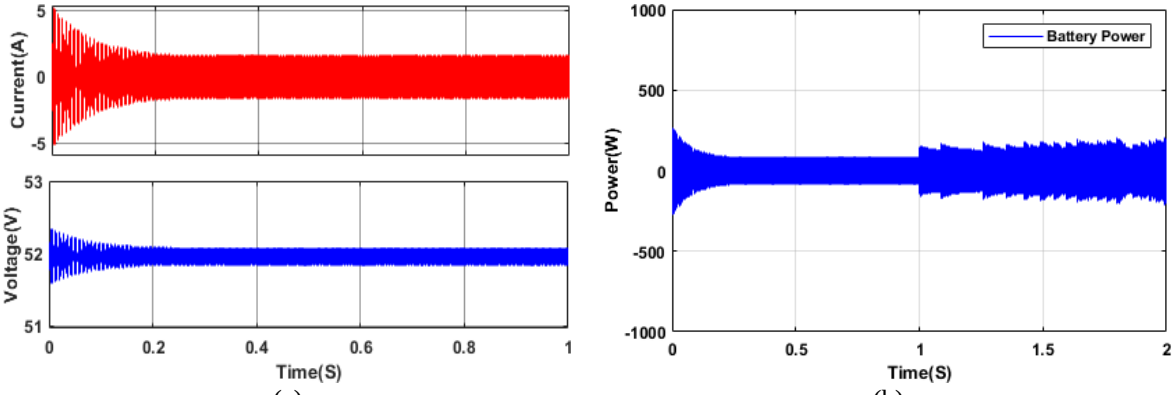

(a) (b)

Figure 15. Results of (a) battery current and voltage and (b) battery power

Table 2. Parameter specification

Category	Parameter	Typical value/range	Category	Parameter	Typical value/range
Electrical parameters	Input voltage (V_{in})	45 V	Semiconductor devices	Switch type	MOSFET/IGBT
	Output voltage (V_{out})	100 V		Diode	Fast recovery diode
	Input current (I_{in})	2 A	Operating modes	Boost mode	Active
	Output current (I_{out})	5 A		Buck mode	Active
	Power rating (P)	500 W	Control parameters	Control method	PWM
Passive components	Inductor (L)	100 µH		Controller type	FLC
	Inductor resistance (R_L)	Few mΩ		Short circuit protection	Enabled
	Output capacitor (C)	100 µF – 2000 µF			
Switching parameters	Switching frequency (f_s)	10 kHz – 100 kHz			
	Duty cycle (D)	0 – 1			
	Dead time (td)	100 ns – 1 µs			

Table 3. Performance parameter comparison

Performance Parameter	With PI	With FLc	Enhancement
Rise time (0–1000 rpm)	0.15 s	0.08 s	47% faster
Peak overshoot (1st step)	3.5% (1035 rpm)	0% (1000 rpm)	Eliminated
Settling time (±2%)	0.30 s	0.12 s	60% reduction
Speed dip at load disturbance (0.5 s)	700 rpm	830 rpm	130 rpm less deviation
Maximum undershoot	30%	17%	43% reduction
Recovery time after disturbance	0.30 s	0.18 s	40% faster
Steady-state error	0	0	Same

Table 4. Voltage responses comparison

Performance parameter	With PI	With FLC	Enhancement with FLC
Voltage overshoot	±100 V	±20 V	~80% reduction
Peak-to-peak voltage	200 V	40 V	Reduced stress
Settling time	Immediate switching but high ripple	0.1 s	Smoother response
Voltage dip at 0.5 s disturbance	Not clearly regulated	50% reduction in dip magnitude	Better regulation
Oscillatory behavior	High switching ripple	Low oscillatory envelope	Improved damping
Voltage regulation	Poorer	Better	Improved tracking

The fuzzy logic controller exhibits superior current regulation performance compared with the conventional PI controller, as shown in Table 5. The fuzzy controller reduces the peak startup current from approximately ±2.6 A to ±0.6 A, representing a 76.9% reduction. Furthermore, the settling time is improved from 0.08 s to 0.03 s, while transient oscillations and current overshoot are significantly suppressed. During load disturbances, the fuzzy controller demonstrates faster adaptation and smoother current tracking, resulting in enhanced dynamic performance, reduced electrical stress on the machine, and improved power quality.

Table 5. Current response comparison

Performance parameters	With PI	With FLC	Enhancement with FLC
Initial current peak	±2.6 A	±0.6 A	77% reduction
Current overshoot	Very high	Negligible	Significant reduction
Oscillations during startup	Severe	Very low	Improved damping
Steady-state ripple	Moderate	Low	Reduced
Current amplitude after load change	±1.0 A	±1.05 A	Comparable
Transient at 0.5 s load change	Noticeable oscillations	Smooth transition	Better disturbance rejection

7. CONCLUSION

The paper proposed an FLC-based bidirectional DC-DC converter for regenerative braking in a BLDC motor-driven EV to improve energy recovery, dynamic response, and battery charging performance. The proposed controller efficiently manages bidirectional power flow for motoring and regenerative braking modes by adaptively regulating the converter duty cycle for different operating conditions. The simulation results using MATLAB / Simulink shows that the suggested FLC has much better transient response and stability of the whole system compared with the conventional PI controller. The FLC reduced the rise time from 0.15 s to 0.08 s (47% improvement) and the settling time from 0.30 s to 0.12 s (60% reduction), while completely eliminating the speed overshoot of 3.5% with the PI controller. Moreover, maximum undershoot was reduced by 43% and recovery time after load disturbance was improved by 40%, leading to smooth regenerative braking and improved speed regulation. Moreover, the controller significantly improves the

electrical performance of the converter, where the voltage overshoot has been reduced from ±100 V to ±20 V (nearly 80%), and the initial current surge has been decreased from ±2.6 A to ±0.6 A (around 77%). These improvements significantly reduced transient oscillations, improved stability of the DC-link voltage, and reduced electrical stress on battery and power electronic components. It can be observed that the maximum battery charging current is 2.68 A and the maximum recovered battery power is 483.65 W during regenerative braking, which indicates effective energy recovery and stable battery charging. The proposed FLC-based bidirectional DC–DC converter presents a reliable, computationally efficient, and robust solution to the next generation of electric vehicles. Future work will target hardware implementation, hardware-in-the-loop validation, adaptive self-tuning fuzzy optimization, and integration with state-of-the-art battery management systems for real-time EV applications.

FUNDING INFORMATION

Authors state no funding involved.

AUTHOR CONTRIBUTIONS STATEMENT

This journal uses the Contributor Roles Taxonomy (CRediT) to recognize individual author contributions, reduce authorship disputes, and facilitate collaboration.

Name of Author	C	M	So	Va	Fo	I	R	D	O	E	Vi	Su	P	Fu
Amruta Yelsatti	✓	✓	✓	✓	✓	✓		✓	✓	✓			✓	
Vilaskumar Patil	✓	✓			✓	✓		✓		✓	✓	✓		

C : **C**onceptualization
M : **M**ethodology
So : **So**ftware
Va : **Va**lidation
Fo : **Fo**rmal analysis
I : **I**nvestigation
R : **R**esources
D : **D**ata Curation
O : Writing - **O**riginal Draft
E : Writing - Review & **E**diting
Vi : **Vi**sualization
Su : **Su**pervision
P : **P**roject administration
Fu : **Fu**nding acquisition

CONFLICT OF INTEREST STATEMENT

Authors state no conflict of interest.

DATA AVAILABILITY

The data that support the findings of this study are available on request from the corresponding author, [AY]. The data, which contain information that could compromise the privacy of research participants, are not publicly available due to certain restrictions.

REFERENCES

[1] F. Alanazi, "Electric vehicles: benefits, challenges, and potential solutions for widespread adaptation," *Applied Sciences*, vol. 13, no. 10, May 2023, doi: 10.3390/app13106016.
[2] C. Armenta-Déu and H. Cortés, "Analysis of kinetic energy recovery systems in electric vehicles," *Vehicles*, vol. 5, no. 2, pp. 387–403, Mar. 2023, doi: 10.3390/vehicles5020022.
[3] R. K. Chidambaram *et al.*, "Effect of regenerative braking on battery life," *Energies*, vol. 16, no. 14, Jul. 2023, doi: 10.3390/en16145303.
[4] P. Rajesh, F. H. Shajin, and B. N. Kommula, "An efficient integration and control approach to increase the conversion efficiency of high-current low-voltage DC/DC converter," *Energy Systems*, vol. 13, no. 4, pp. 939–958, Nov. 2022, doi: 10.1007/s12667-021-00452-w.
[5] M. Subbarao, K. Dasari, S. S. Duvvuri, K. R. K. V. Prasad, B. K. Narendra, and V. Murali Krishna, "Design, control and performance comparison of PI and ANFIS controllers for BLDC motor driven electric vehicles," *Measurement: Sensors*, vol. 31, Feb. 2024, doi: 10.1016/j.measen.2023.101001.
[6] M. A. Baba, M. Naoui, and M. Cherkaoui, "Modeling and simulation of a BLDC motor speed control in electric vehicles," 2023, pp. 883–895, doi: 10.1007/978-3-031-29857-8_88.
[7] A. W. Lins and R. Krishnakumar, "Tuning of PID controller for a PV-fed BLDC motor using PSO and TLBO algorithm," *Applied Nanoscience*, vol. 13, no. 4, pp. 2911–2934, Apr. 2023, doi: 10.1007/s13204-021-02272-x.
[8] N. Dániel and S. Hajdu, "Simulation of BLDC motor drive systems for electric vehicles using MATLAB Simulink," *International Journal of Engineering and Management Sciences*, vol. 8, no. 1, pp. 48–52, 2023, doi: 10.21791/ijems.2023.1.6.
[9] B. Ashok *et al.*, "Model based integrated control strategy for effective brake energy recovery to extend battery longevity in electric two wheelers," *Proceedings of the Institution of Mechanical Engineers, Part D: Journal of Automobile Engineering*, vol. 238, no. 9, pp. 2843–2864, Aug. 2024, doi: 10.1177/09544070231167616.
[10] S. Begam, "Regenerative braking in electric vehicles using BLDC motor with modified torque and adaptive-neuro-fuzzy-control," *Przegląd Elektrotechniczny*, vol. 1, no. 3, pp. 186–192, Mar. 2024, doi: 10.15199/48.2024.03.33.

[11] R. Kannan, P. K, K. C, N. M. Nor, and S. Gandhi A, "Design and simulation of a bidirectional DC-DC converter with PI controller for regenerative braking in electric vehicles," in *2023 IEEE Conference on Energy Conversion (CENCON)*, Oct. 2023, pp. 64–69, doi: 10.1109/CENCON58932.2023.10369135.
[12] E. Martinez-Vera and P. Banuelos-Sanchez, "Review of bidirectional DC-DC converters and trends in control techniques for applications in electric vehicles," *IEEE Latin America Transactions*, vol. 22, no. 2, pp. 144–155, 2024, doi: 10.1109/TLA.2024.10412031.
[13] A. Kalaichelvan, S. Purushothaman, M. Kamalkannan, N. Joseph, and R. Murugavel, "Bidirectional DC-DC converter and improved electrical vehicle dynamic response control," *Recent Advances in Electrical & Electronic Engineering (Formerly Recent Patents on Electrical & Electronic Engineering)*, vol. 17, no. 5, pp. 444–455, Jun. 2024, doi: 10.2174/2352096516666230808155657.
[14] D. Luo, W. Yang, Y. Wang, Y. Han, Q. Liu, and Y. Yang, "Investigation of regenerative braking for the electric mining truck based on fuzzy control," *International Journal of Vehicle Performance*, vol. 10, no. 1, pp. 73–95, 2024, doi: 10.1504/IJVP.2024.135452.
[15] A. Sreekumar, A. Prince, and G. A. George, "An improved regenerative braking and drive cycle analysis of BLDC motor for electric vehicles using fuzzy logic," 2023, pp. 563–574, doi: 10.1007/978-981-19-4975-3_45.
[16] M. Nandakumar, "Design of BLDC motor drive system using alternative controllers for performance evaluation in electric vehicle applications," *International Journal of Vehicle Design*, vol. 94, no. 1/2, pp. 57–82, 2024, doi: 10.1504/IJVD.2024.136234.
[17] B. Saha and B. Singh, "An adaptive delay compensated position sensorless PMBLDC motor drive with regenerative braking for LEV application," *IEEE Transactions on Energy Conversion*, vol. 38, no. 3, pp. 1793–1802, Sep. 2023, doi: 10.1109/TEC.2023.3268617.
[18] A. Basu, M. Singh, and A. S. S. Vardhan, "Energy regeneration of a position sensorless BLDC-driven PV e-rickshaw with regenerative braking," *Electrical Engineering*, vol. 106, no. 2, pp. 1357–1372, Apr. 2024, doi: 10.1007/s00202-023-02140-7.
[19] B. Saha and B. Singh, "Solar PV integration to E-rickshaw with regenerative braking and sensorless control," in *2020 IEEE 17th India Council International Conference (INDICON)*, Dec. 2020, pp. 1–6, doi: 10.1109/INDICON49873.2020.9342184.
[20] P. Jayarajan, S. Latchaka, R. Manivannan, and S. Kowshik, "Design of bidirectional flyback converter for EV thermal braking," in *Proceedings of 4th International Conference on Electronics and Renewable Systems, ICEARS 2026*, 2026, pp. 504–508, doi: 10.1109/ICEARS67481.2026.11416491.
[21] M. A. Aman, W. J. Chang, M. S. Aslam, M. Salman, and H. Bilal, "Control strategies and power converter topologies for switched reluctance motors in electric vehicle applications: A comprehensive review," *International Journal of Optimization and Control: Theories and Applications*, vol. 15, no. 4, pp. 549–577, 2025, doi: 10.36922/IJOCTA025280122.
[22] N. Hannan, S. K. Shib, A. Shufian, M. A. Islam, S. M. Islam Sharan, and A. Das Gupta, "Advanced regenerative braking system for EVs: Leveraging BLDC-supercapacitor technologies for optimized energy recovery, economic viability, and maintenance strategies," *Future Batteries*, vol. 7, 2025, doi: 10.1016/j.fub.2025.100103.
[23] L. Ramasamy, N. Soundirarajan, and R. J. Varsha, "Artificial neural network based bidirectional converter control for electric vehicle charging," in *Proceedings of the First International Conference on Science, Engineering and Technology Practices for Sustainable Development, ICSETPSD 2023, 17th-18th November 2023, Coimbatore, Tamilnadu, India*, 2024, doi: 10.4108/eai.17-11-2023.2342838.
[24] M. Kurtoğlu and F. Eroğlu, "Design and simulation of bidirectional DC-DC converter topology for battery applications," *E3S Web of Conferences*, vol. 551, 2024, doi: 10.1051/e3sconf/202455103002.
[25] N. Dias, A. J. Naik, and V. N. Shet, "A novel tri-mode bidirectional DC–DC converter for enhancing regenerative braking efficiency and speed control in electric vehicles," *World Electric Vehicle Journal*, vol. 15, no. 1, 2024, doi: 10.3390/wevj15010012.
[26] M. Bharathidasan, V. Indragandhi, and B. Aljafari, "Hybrid controlled multi-input DC/DC converter for electric vehicle application," *International Transactions on Electrical Energy Systems*, vol. 2023, 2023, doi: 10.1155/2023/8308418.
[27] K. Venkata Govardhan Rao, M. K. Kumar, B. S. Goud, M. Bajaj, M. Abou Houran, and S. Kamel, "Design of a bidirectional DC/DC converter for a hybrid electric drive system with dual-battery storing energy," *Frontiers in Energy Research*, vol. 10, 2022, doi: 10.3389/fenrg.2022.972089.
[28] M. Rezk and H. Abuzied, "Artificial neural networks: a promising tool for regenerative braking control in electric vehicles," *European Journal of Engineering and Technology Research*, vol. 8, no. 5, pp. 49–58, 2023, doi: 10.24018/ejeng.2023.8.5.3098.
[29] A. I. Abouseda, R. O. Doruk, and A. Amini, "Parameter identification and speed control of a small-scale BLDC motor: Experimental validation and real-time PI control with low-pass filtering," *Machines*, vol. 13, no. 8, 2025, doi: 10.3390/machines13080656.

BIOGRAPHIES OF AUTHORS



Amruta Yelsatti received her bachelor's degree in electrical and electronics engineering from PDA College of Engineering, Kalaburagi, India, in 2012 and her master's degree in electrical power systems from Jawaharlal Nehru Technological University, Hyderabad, India, in 2015. She is currently an assistant professor in the Department of Electrical and Electronics Engineering, Faculty of Engineering and Technology (Exclusively for Women), at Sharnbasva University, Kalaburagi, India. Her research interests include power systems, electric drives, intelligent control systems, power electronics, and power converters. She can be contacted at email: aks.yelsatti@gmail.com.



Vilaskumar Patil received bachelor's degree in Electronics and Communication Engineering, the Master's degree in Power Electronics and the philosophy of doctorate degree in Electrical Science from Visvesvaraya Technological University (VTU), Belagavi in the year 2008,2012 and 2021 respectively. He is presently working as associate professor at the Department of Electrical and Electronics Engineering, Faculty of Engineering and Technology, Sharnbasva University, Kalaburagi. His research areas include wireless communication, machine learning and power electronics. He has published more than eight papers in reputed and scopus indexed Journals also published and presented more than 15 papers in National and International Conferences. He can be contacted at email: mpvilaskumar@gmail.com.