International Journal of Power Electronics and Drive System (IJPEDS)
Vol. 17, No. 4, December 2026, pp. 2953~2964
ISSN: 2088-8694, DOI: 10.11591/ijpeds.v17.i4.pp2953-2964

Effects of base fluid and pipe geometry on hybrid PV/T-PCM system efficiency

Diefa Nasywa Aedelia[1], Zainal Arifin[1], Rendy Adhi Rachmanto[1], Singgih Dwi Prasetyo[2]
[1]Department of Mechanical Engineering, Universitas Sebelas Maret, Surakarta, Indonesia
[2]Power Plant Engineering Technology, Faculty of Vocational Studies, State University of Malang, Malang, Indonesia

Article Info

Article history:

Received Jul 19, 2026
Revised Aug 26, 2026
Accepted Sep 17, 2026

Keywords:

Hybrid photovoltaic thermal system
Nanofluid
Phase change material
Pipe geometry
Solar thermal management

ABSTRACT

Hybrid photovoltaic/thermal systems integrated with phase change materials (PV/T-PCM) can improve electrical performance while recovering thermal energy by regulating photovoltaic operating temperature. However, base-fluid properties and collector-pipe geometries are often investigated separately, limiting understanding of their combined effects. This study presents a systematic literature review of research published between 2010 and 2024 to examine the individual and combined influences of working-fluid selection and pipe geometry on PV/T-PCM performance. Relevant studies were retrieved from Scopus using a predefined search protocol and assessed against established inclusion and exclusion criteria. The findings indicate that advanced working fluids, particularly nanofluids and encapsulated phase change material slurries, can enhance heat transfer, while optimized pipe and PCM-container geometries can improve heat extraction and temperature uniformity. Studies combining fluid and geometry enhancements report promising performance improvements; however, these results depend on system configuration and operating conditions and should not be treated as universal benchmarks. Key challenges include fluid instability, PCM degradation, increased pumping-power requirements, economic feasibility, and the lack of standardized evaluation methods. This review provides an integrated perspective to support the design and further development of efficient and reliable PV/T-PCM systems.

This is an open access article under the CC BY-SA license.

Corresponding Author:

Zainal Arifin
Department of Mechanical Engineering, Universitas Sebelas Maret
Surakarta 57126, Indonesia
Email: zainal_arifin@staff.uns.ac.id

1. INTRODUCTION

Photovoltaic (PV) technology is a leading renewable-energy solution [1]. Still, commercial modules convert only a fraction of incident solar radiation to electricity, dissipating the rest as heat that raises cell temperature, reduces electrical efficiency, and accelerates degradation. Effective thermal management is therefore critical to PV performance and durability [2]. Hybrid photovoltaic/thermal systems with phase change materials (PV/T-PCM) address this by simultaneously generating electrical and thermal energy while using latent-heat storage to regulate PV temperature [3], [4], governed chiefly by working-fluid thermophysical properties and collector geometry: nanofluids and encapsulated PCM slurries offer higher conductivity than water/ethylene glycol, and ribbed, concave, trapezoidal, and micro-structured pipe geometries improve uniformity by increasing heat-transfer area and mixing.

Nanofluids enhance conductivity and heat extraction [5]-[7], while optimized geometries improve uniformity and reduce operating temperature [8]-[10]; other studies apply CFD [11], machine learning [12], and techno-economic analysis [13], [14] to optimize feasibility. However, most studies investigate base-fluid or pipe-geometry optimization independently, and comparative analyses of their combined interaction remain

limited. Most reported gains also come from laboratory/simulated conditions, with outdoor validation, standardized testing, durability, pumping power, and economic analyses insufficiently addressed [15], leaving a fragmented understanding of practical PV/T-PCM applications.

Systematic, review-level comparisons of base fluids across pipe cross-sections in PV/T-PCM systems remain limited; this review addresses that gap by synthesizing 2010-2024 studies to evaluate base fluid selection, pipe geometry, and their combined interaction, integrating fluid engineering, collector design, PCM, computational modeling, and intelligent thermal management into a unified framework, and comparing cooling strategies, limitations, and future opportunities. By clarifying this relationship, the review supports next-generation PV/T-PCM design for smart energy systems and large-scale PV applications. Although grounded in thermal management, these findings connect directly to power-electronic system design, the core scope of this journal: PV cell temperature, set by base-fluid and pipe-geometry choices, is the state variable seen by the MPPT controller and inverter, and the PCM latent-heat store can be treated as a schedulable storage state alongside converter operating point and grid price signals (section 5), linking these findings to inverter thermal derating and EV-charging thermal management: section 2 presents the theoretical background, section 3 describes the methodology, section 4 discusses the results, and section 5 presents the conclusions.

2. THEORETICAL BASIS

2.1. Thermophysical properties of base fluids

Water remains the most common base fluid owing to its high heat capacity and low viscosity, which favor PV cooling and electrical efficiency, whereas ethylene glycol is used in higher-temperature applications at the cost of somewhat lower thermal efficiency [16], [17]. Nanofluids formulated with multi-walled carbon nanotubes (MWCNT), graphene oxide (GO), or polyethylene-glycol/MgO (PEG-MgO) nanoparticles can raise thermal conductivity by up to roughly 1100% relative to the base fluid alone [5], [6]. PEG-MgO nanofluids in particular exhibit stable viscosity, density, and heat capacity suited to medium-temperature solar applications [18], [19], while hybrid GO/MWCNT nanofluids display superior colloidal stability and thermal performance [20].

This 1100% figure describes bulk thermal conductivity measured in isolation, not system-level gain: because the convective coefficient in (2) depends on conductivity sub-linearly and is bounded by flow regime and viscosity penalties, the corresponding electrical-efficiency improvement for nanofluid-cooled PV/T-PCM systems is on the order of 3-19 percentage points (section 4), not 1100%; the two figures are not directly comparable. Encapsulated PCM slurries (ePCM-S), which suspend PCM microcapsules in a carrier fluid, combine sensible and latent heat transport. Metallic shell materials (silver, gold, copper, aluminum) improve solar capture and heat transfer, and graphene-doped shells further enhance convection [21], [22]; shell/core material, thickness, and capsule concentration jointly determine slurry stability and pumping-power demand [23], [24]. Long-term performance is limited mainly by nanoparticle agglomeration, sedimentation, and freeze-thaw degradation [25]; an optimal MgO concentration of ~0.2 wt% balances conductivity against colloidal stability [7], [18], and PEG-MgO-MXene formulations have been associated with reduced CO_2 emissions over an assumed 20-year lifetime [14], [20].

2.2. Pipe and container geometry

Straight tubes are the baseline design [26], but wavy and hybrid tube geometries achieve more uniform temperature distribution and higher exergy and thermohydraulic efficiency with limited pressure-drop penalty [10]. Ribbed and concave walls increase effective heat-transfer area; concave tubes raise efficiency by roughly 8.35% relative to round tubes without a significant flow-resistance increase [9]. Trapezoidal and half-elliptic cross-sections with optimized aspect ratio (~0.25) also maximize overall efficiency [8], [11]. The shape and orientation of the PCM container also affect natural convection and melting: triangular containers optimize thermal performance and melting rate, while annular and inclined arrangements reduce melting time by up to ~33% [27]-[29]. CFD simulation, validated experimentally, is widely used to optimize container geometry, fins, and channel parameters, with enthalpy-porosity and arbitrary Lagrangian-Eulerian methods improving accuracy at greater computational cost [17], [30], [31].

2.3. Governing heat transfer relations

Base fluid enhancement and pipe-geometry optimization act as complements rather than substitutes. The PV/T-PCM system is a coupled thermal network partitioning absorbed solar energy between electrical output, useful thermal gain, and latent-heat storage:

$$Q_{Solar} = Q_{electric} + Q_{hot\ fluid} + Q_{PCM} + Q_{loss} \quad (1)$$

where the useful thermal gain to the fluid, Q fluid, is governed by convective heat transfer from the absorber wall to the working fluid.

$$Q_{fluid} = h \cdot A \cdot (T_{wall} - T_{fluid}) \quad (2)$$

The base-fluid properties discussed in section 2.1 enhance the convective heat-transfer coefficient, h, through their thermal conductivity and rheological characteristics, whereas the collector geometries described in section 2.2 increase the effective heat-transfer area, A, and the local Nusselt number by promoting turbulence. Because h and A appear multiplicatively in (2), their simultaneous improvement provides a multiplicative rather than additive enhancement, forming the mechanistic basis for the synergistic effects discussed in section 4.3.

Geometric modification is not free: pumping power scales with pressure drop across the collector.

$$P_{\text{pump}} = (\Delta P \cdot \dot{V}) / \eta_{\text{pump}} \quad (3)$$

Where ΔP is the pressure drop, $\dot{V}$ is the volumetric flow rate, and η is the pump efficiency. Micro-structured and hybrid tube geometries that increase turbulence and heat-exchange area (2) generally increase ΔP as well, so the net benefit of a given geometry must be assessed net of its pumping-power penalty; hybrid-tube configurations have been reported to improve thermohydraulic efficiency while reducing pressure drop by around 30% relative to comparable wavy-tube designs, illustrating that the trade-off is design-dependent rather than fixed [10]. This pumping-power balance is revisited quantitatively in section 4.2.

3. METHOD

3.1. Research design

This study employed a systematic literature review (SLR) approach, chosen for its structured, transparent, reproducible framework, minimizing selection bias through predefined search, eligibility, and extraction procedures, to evaluate how base fluid selection and pipe geometry affect hybrid PV/T-PCM performance, identify technological challenges and gaps, and highlight future opportunities. The review procedure comprised identification, screening, eligibility assessment, extraction, comparative analysis, and synthesis, illustrated in Figure 1.

3.2. Literature search strategy

Relevant publications were retrieved from Scopus. The search was conducted on 13 July 2026, covering 2010-2024, using the string: ("photovoltaic thermal" OR "PV/T") AND ("phase change material" OR "PCM") AND ("base fluid" OR "nanofluid" OR "coolant") AND ("pipe geometry" OR "thermal collector" OR "heat transfer"), focused on PV/T systems, PCM, working fluids, collector geometries, and heat-transfer enhancement. Boolean operators combined keywords to improve accuracy. Additional records from citation tracking, if any, were recorded separately and screened using the same criteria; these records were not used to justify the inclusion of sources outside the 2010-2024 window. Table 1 summarizes this search protocol, including the database, publication period, language, document types, subject areas, and main keywords, which together define the scope of the records retrieved for screening.

Table 1. Literature search protocol

Item	Description
Review approach	Systematic literature review (SLR)
Database	Scopus
Publication period	2010–2024
Language	English
Document types	Research articles and review papers
Subject areas	Renewable energy, energy, mechanical engineering, materials science
Main keywords	Photovoltaic thermal (PV/T), phase change material (PCM), base fluid, Nanofluid, Pipe geometry, thermal collector, heat transfer

3.3. Literature selection criteria

Predefined inclusion and exclusion criteria (Table 2) were established before screening to ensure consistency and quality. Only peer-reviewed studies directly related to PV/T-PCM thermal management were considered; conference abstracts, non-English publications, and studies unrelated to cooling technologies were excluded. A standardized set of performance indicators was defined before extraction for cross-study comparability: PV temperature (°C), electrical/thermal/exergy/overall efficiency (%), electrical power output (W), energy yield (kWh/m² or kWh/kWp), and temperature-coefficient loss (%/°C), the last three capturing cooling benefit in delivered-energy terms relevant to system-level design.

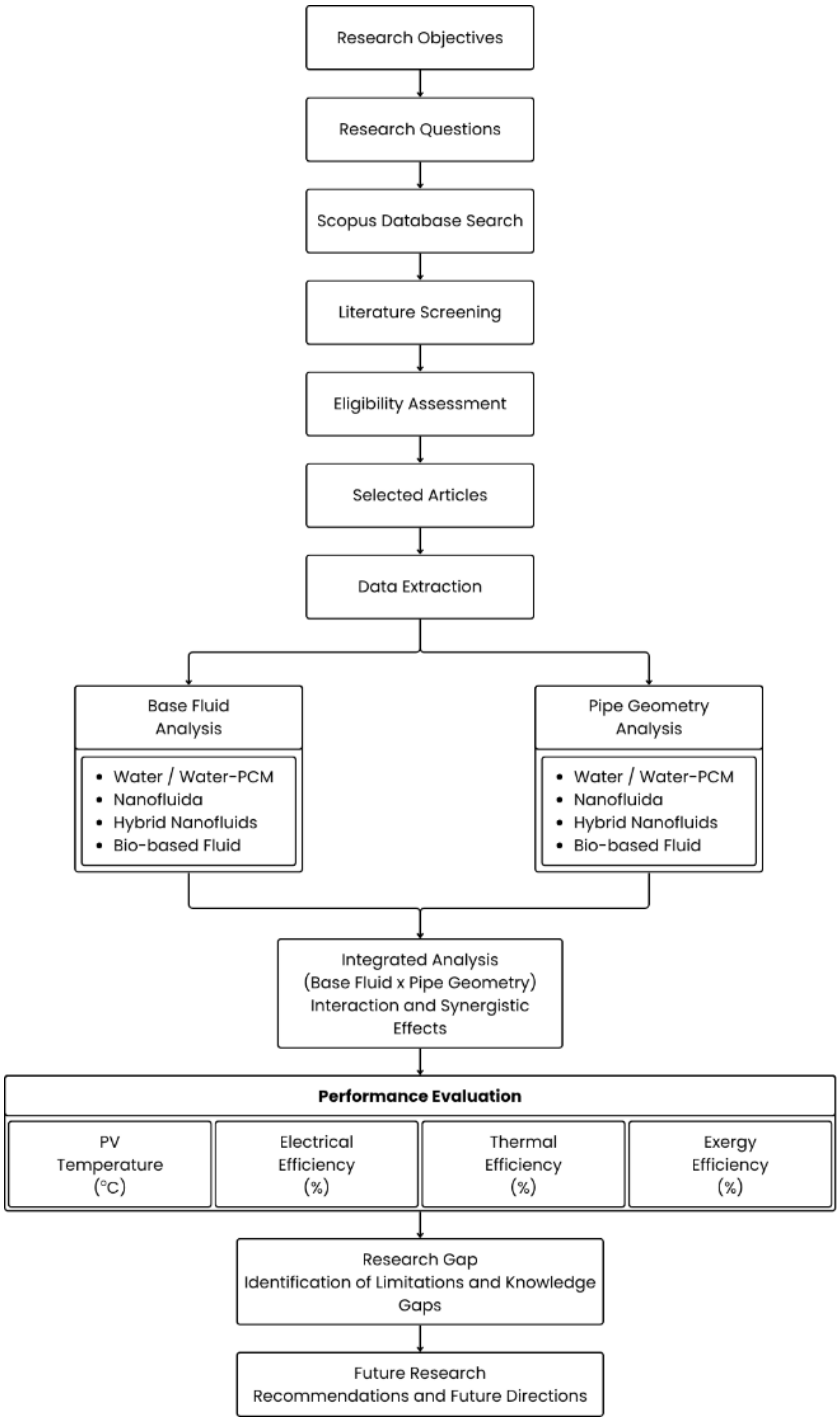

Figure 1. Research framework of the systematic literature review

3.4. Literature screening process

Literature selection proceeded through four stages. Publications were retrieved from Scopus using the predefined keywords, and duplicate records were removed. Title/abstract screening and full-text eligibility assessment were performed independently by two reviewers against the criteria in Table 2; disagreements were resolved by discussion or, where needed, a third reviewer. Studies that passed preliminary screening were evaluated against their objectives, methodology, thermal management strategy, and reported indicators; those meeting all requirements were included in the qualitative synthesis. The complete selection flow and exclusion reasons are summarized in Figure 2.

Table 2. Inclusion and exclusion criteria

Inclusion criteria	Exclusion criteria
Published between 2010 and 2024	Published before 2010
English-language publications	Non-English publications
Scopus-indexed journals	Non-indexed sources
Experimental, numerical, or review studies	Editorials, book chapters, conference abstracts
Studies discussing PV/T-PCM systems	Studies limited to conventional PV systems
Studies evaluating base fluid, pipe geometry, or thermal management	Studies without a quantitative or qualitative discussion of cooling performance

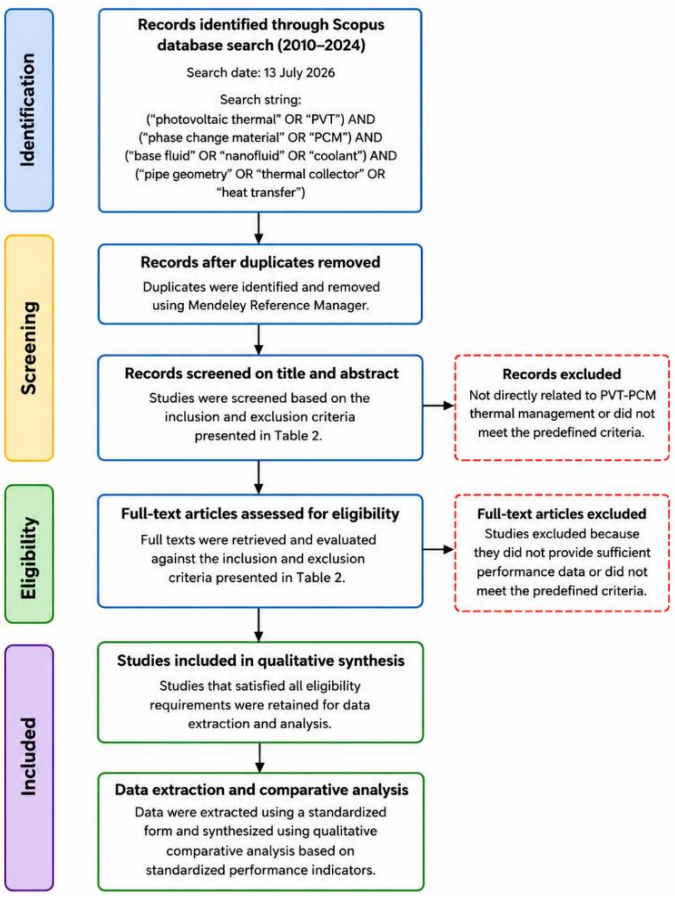

Figure 2. Flow of literature identification, screening, eligibility assessment, and inclusion applied in this review

3.5. Data extraction

Information from selected studies was systematically extracted for comparative analysis, covering bibliographic details, research methodology, thermal management approach, and reported indicators (Table 3). Values were recorded as reported in the original articles, so the ranges presented in section 4 reflect the source studies rather than new measurements. The extracted records were then grouped by cooling medium and collector geometry to allow comparison under the standardized indicators defined in section 3.3, and this grouped dataset served as the input for the synthesis described in section 3.6.

Table 3. Extracted information from the reviewed literature

Category	Extracted information
Bibliographic information	Authors, publication year
Research methodology	Experimental, numerical, or review
Cooling medium	Water, ethylene glycol, nanofluid, hybrid nanofluid, PCM slurry
PCM material	Paraffin, RT-series PCM, and Bio-PCM
Collector geometry	Circular, square, trapezoidal, ribbed, microchannel
Performance indicators	PV temperature, electrical efficiency, thermal efficiency, exergy efficiency, overall efficiency
Main findings	Performance improvements and key conclusions
Limitations	Limitations

3.6. Data synthesis

Included studies were tagged into three evidence tiers by system configuration: direct PV/T-PCM evidence (a working collector with integrated PCM), closely related PV/T evidence (PV/T collectors without PCM, used only to contextualize findings not yet reported for a PCM configuration), and broader thermal-management evidence (nanofluid, microchannel, or standalone-PCM studies outside a PV/T collector, used only for background in section 4.4). Core findings in sections 4.1-4.3 draw only on direct PV/T-PCM evidence; findings from the other tiers are identified as such at first use. Extracted studies were analyzed by qualitative comparative analysis across five themes: i) base fluid effects, ii) pipe geometry effects, iii) synergistic fluid-geometry interaction, iv) environmental/techno-economic considerations, and v) emerging intelligent thermal management. Results were synthesized using standardized indicators (operating temperature, electrical/thermal/exergy/overall efficiency) to identify consistent trends despite differing configurations. Conflicting findings were weighed, in order: i) corroboration by multiple independent studies over single-study results, ii) higher composite quality score, iii) experimental over purely numerical results for the same configuration, and iv) where divergence remained, the full range was retained (e.g., the ranges reported in section 4) and its source (operating conditions, PCM type, nanoparticle concentration) noted qualitatively in section 4.

3.7. Quality assessment

Publication quality was assessed on relevance, methodological completeness, data availability, and publication quality; only peer-reviewed journal articles with sufficient PV/T-PCM technical detail were included in the final synthesis. Primary research articles (experimental or numerical) were counted as included studies for the quantitative synthesis. At the same time, review papers that met the same criteria were retained as supporting literature for context and gap identification rather than as new quantitative findings.

Each of the five criteria in Table 4 was scored 0 (not met), 1 (partially met), or 2 (fully met), giving a composite score of 0-10; scores below 5 were weighted less heavily. Studies scoring 8-10 were classified as high-confidence, 5-7 as moderate-confidence, and below 5 as low-confidence. Within Methodological quality specifically, a study scored 2 only if it also reported experimental uncertainty/repeatability (experimental studies) or boundary-condition completeness and mesh-independence verification (numerical/CFD studies); a lower composite score directly reduces a study's influence on synthesis and disqualifies it from being the sole basis for a corroborated finding.

3.8. Limitations of the review and ethical considerations

Limitations include a search restricted mainly to Scopus-indexed English-language publications and variation in climatic conditions, configurations, PCM materials, and evaluation methods across studies, which limits direct quantitative comparison; findings should be read as generalized trends rather than absolute benchmarks. As a secondary analysis of published, peer-reviewed literature with no human/animal subjects or primary data collection, institutional review board approval was not required.

Table 4. Quality assessment criteria

Criterion	Description
Relevance	Directly discusses PV/T-PCM thermal management
Methodological quality	Clearly describes experimental or numerical procedures
Data completeness	Reports thermal and/or electrical performance indicators
Technical contribution	Evaluates base fluid, collector geometry, or both
Publication quality	Peer-reviewed Scopus-indexed journal

4. RESULTS AND DISCUSSION

Because this synthesis combines experimental, numerical, and review-type studies, findings are qualified by an evidentiary basis where identifiable. Findings corroborated across multiple studies, such as the approximately 3–5% electrical-efficiency gain from nanofluid cooling [6], [7], [13], are comparatively well-established. Single-study figures, such as 84.6% thermal efficiency and 8.3% electrical efficiency for one ternary-hybrid-nanofluid/rotational-cylinder configuration [32], or the 88.86% overall-efficiency ceiling for a specific combination [33], are interpreted as upper bounds rather than generalizable outcomes.

4.1. Effect of base fluid type on efficiency

Nanofluids and encapsulated PCM slurries consistently outperform conventional water/glycol fluids in thermal conductivity and phase-change kinetics [5], [6], [24]. Improvement depends on nanoparticle type, concentration, and shape: carbon-based nanofluids (MWCNT, GO) give the largest conductivity gains, while PEG-MgO offers a favorable balance of conductivity and stability [5], [6], [18]. Encapsulated PCM slurries

add sensible-plus-latent transport at the cost of formulation complexity and higher pumping power at higher capsule concentration [22]-[24]. Base-fluid enhancement is the primary lever for raising h in (2) and accelerating PCM melting, but agglomeration, sedimentation, and freeze-thaw degradation remain practical constraints [6], [20]. Representative base-fluid type, nanoparticle loading, and PCM melting-temperature ranges across the reviewed studies are consolidated in Table 5; because these values originate from more than 30 distinct configurations, they are presented as reported ranges rather than a single prescriptive design.

Within the PCM, melting temperature and thermal conductivity govern performance in different ways. Melting temperature determines whether the latent-heat buffer engages: a PCM melting too far above cell temperature contributes only sensible heat, while one melting too low is exhausted before the afternoon peak; the reviewed studies concentrate on paraffins with melting points matched to PV operating temperatures. Thermal conductivity governs how quickly stored heat moves in and out of the PCM layer; paraffins are poor conductors, so the limiting resistance often lies within the PCM rather than at the fluid interface, which explains why fin insertion and nanoparticle dispersion recur as the two principal remedies. No parametric study that varied the melting point and conductivity independently within a common geometry was found in this search. Hence, the ranges in Table 5 represent the span of the reviewed configurations rather than a controlled sweep. Table 6 summarizes standardized indicators across cooling-strategy categories, flagging whether each value comes from a single study or is corroborated across studies.

Table 5. Representative base fluid, PCM, and geometry parameters reported in the reviewed literature

Parameter	Reported range	Illustrative refs
Nanoparticle loading (MWCNT, GO, PEG-MgO)	0.1-2.0 wt% (optimal MgO ≈ 0.2 wt%)	[5]-[7], [18]
PCM type	Paraffin wax; encapsulated metallic-shell PCM slurries (Ag, Au, Cu, Al shells)	[3], [22]
Pipe cross-section	Circular (baseline), wavy, ribbed/concave, trapezoidal, half-elliptic	[8]-[10], [16]
Optimized tube aspect ratio	≈ 0.25	[8]
PCM container shape	Rectangular block, triangular, annular, hexagonal	[27], [28], [33], [34]

Table 6. Summary comparison of reported efficiency metrics across major PV/T-PCM cooling-strategy categories (compiled from values already reported in Sections 4.1–4.5 of this review)

Cooling-strategy category	Electrical efficiency	Thermal efficiency	Overall / exergy efficiency	Other reported metrics	Basis/refs
Conventional water/glycol-cooled PV/T (baseline)	Reference baseline	Reference baseline	Reference baseline	—	Corroborated, [16], [17]
Nanofluid-only (non-PCM) cooling	+3–5%	—	—	No latent-heat buffering of transient peaks	Corroborated (review), [7], [13]
Advanced base-fluid-enhanced PV/T-PCM (nanofluid / ePCM slurry)	+3–19 percentage points	—	—	PV temperature reduced ~5–32 °C	Corroborated across studies, [24], [33], [35]
Geometry-optimized PV/T-PCM (hybrid/wavy/ribbed/concave tube)	—	—	Primary +8.01%, exergy +5.5%, thermohydraulic +32% vs. straight; concave/ribbed +8.35% vs. round	Pressure drops − 30% vs. comparable wavy-tube design	Single-study values, [9], [10]
Combined fluid + geometry (synergistic) PV/T-PCM	up to 8.3%	up to 84.6%	up to 88.86%	Ternary nanofluid + rotational-cylinder/triangular-container	Single-study ceiling values, [32], [33]
Microchannel heat-pipe PV/T	—	—	—	Fastest transient response; higher pressure drops	Single-study, [35]
4E techno-economic average (broader PV/T-PCM literature)	+3–5%	+20–30%	—	Cost -15-20%; payback <6 yr	Corroborated (review), [13]

4.2. Effect of pipe and container geometry on efficiency

Geometric optimization raises the effective heat-exchange area A and promotes turbulence, reducing thermal stratification and enhancing PCM convection, rather than raising the convective coefficient h directly [31], [36], [37]; because it acts on A rather than h (section 2.3), it complements rather than substitutes for fluid enhancement. This benefit has a cost. Optimized hybrid-tube configurations achieve 8.01%, 5.5%, and 32% improvements in primary, exergy, and thermohydraulic efficiency relative to straight tubes while reducing pressure drop by ~30% versus comparable wavy-tube designs [10]. Concave and ribbed tubes raise efficiency by ~8.35% relative to round tubes without a significant increase in flow resistance [9], while

smaller-channel/micro-structured designs elsewhere trade a larger area gain against disproportionately higher pressure drop; the (3) pumping-power balance is design-specific.

Temperature uniformity matters because a PV string operates near its weakest cell's current, so a hot region underperforms relative to a flatter thermal profile and accelerates encapsulant degradation. Wavy/hybrid tubes flatten this profile by distributing flow evenly; ribbed/concave walls disrupt the thermal boundary layer, limiting streamwise temperature rise; and triangular/annular PCM containers promote convection and reduce stagnant regions. These mechanisms are drawn from contour and thermal-distribution data in the original studies; as a literature synthesis, this review generates no new temperature-distribution data, and the Figure 3 schematic is a conceptual summary rather than measured contours. Generating comparable contour data is identified as a priority for future work (section 5).

4.3. Interaction between base fluid and pipe geometry

The strongest gains arise when fluid and geometry enhancement are combined. Ternary hybrid nanofluids with rotational-cylinder configurations reach thermal efficiencies up to ~84.6% and electrical efficiencies up to ~8.3% [32]. Triangular PCM containers with hybrid nanofluids favor thermal performance while larger-surface-area geometries favor electrical efficiency, suggesting the optimal pairing depends on the prioritized metric [28], [32]. Blade-shaped nanoparticles with multi-cylinder pipe arrangements raise electrical efficiency by up to ~9.4% [33]; lamina-shaped nanoparticles with hexagonal containers reduce solidification time by up to ~24% and 12%, respectively, and internal-external fin designs cut melting/solidification time by up to ~48% [34], [38], [39]. Combined optimization has been associated with overall efficiencies up to 88.86%, exceeding those of either lever alone [32], [33]. However, achieving this requires balancing the added pumping power (3) against the heat-transfer benefit. Tri-hybrid PV/T-PCM-heat-pump configurations, while exceeding 60% overall efficiency, still face open questions on degradation and long-term validation [40], [41].

Figure 3 schematically illustrates the principal heat-flow paths: solar irradiance at the PV cell is partly converted to electricity and partly conducted to the absorber/pipe wall, transferred by convection to the circulating fluid, and exchanged downstream with the PCM container for latent-heat storage, following the energy pathway of (1)-(2); the diagram is conceptual, not new experimental data.

4.4. Comparison with alternative cooling strategies

PV/T-PCM occupies a complementary niche versus other strategies: encapsulated-PCM PV/T gives the most stable full-day cell-temperature regulation, while microchannel heat-pipe PV/T responds fastest but at a higher pressure-drop penalty [35], consistent with geometry-led designs trading pumping power for speed versus PCM designs trading storage volume for load-levelling (section 4.2). Nanofluid-only cooling gives similar ~3-5% gains without transient-peak buffering [7], [13], suggesting the two address different failure modes rather than competing directly.

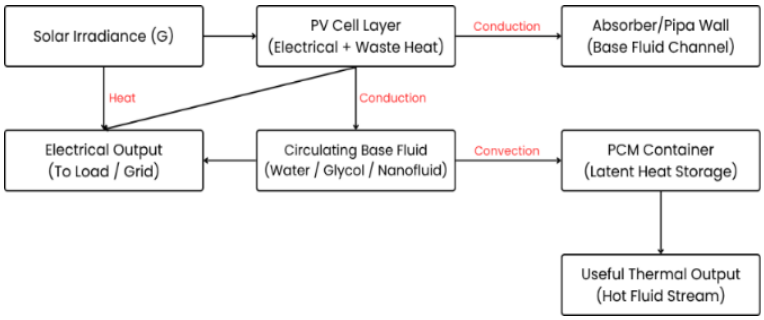

Figure 3. Conceptual heat-flow schematic of a hybrid PV/T-PCM system

4.5. Environmental, economic, and measurement-rigor implications

Life-cycle and techno-economic studies indicate optimized PV/T-PCM systems can reduce CO_2 emissions and shorten payback relative to conventional cooling, though payback varies widely (~4.5-25 years) with cost, design, and climate [14], [42]. A 4E assessment across the broader literature reports ~3-5% electrical and ~20-30% thermal efficiency gains, ~15-20% cost reduction, and payback under six years for favorable configurations [13]; high capital costs and non-harmonized LCA/4E methodologies remain barriers to comparison and adoption [14]. Electrical power output and energy yield translate cooling into system-sizing terms: since output scales with efficiency, the ~3-5% gains imply a proportional rise in power, while energy

yield better captures the PCM-specific benefit, since the buffer mainly suppresses peak-hour temperature. Silicon modules lose ~0.3-0.5% output per °C above 25°C, so the ~5-32°C reductions reported imply a recovered output broadly consistent with the efficiency gains, a useful cross-check. However, few studies report all three indicators together. Few PV/T-PCM-specific studies report formal uncertainty analyses; related PV cooling experiments report ~2.3%/1.2%/1.7% measurement uncertainties for irradiance/ambient/surface temperature, suggesting that measurement error is unlikely to dominate the spread observed in sections 4.1-4.3, which more plausibly reflects genuine differences in formulation, geometry, and test conditions.

4.6. Intelligent control, sensitivity to operating conditions, and adaptive optimization

A smaller, growing body of work applies AI/machine learning to optimize nanofluid dispersion, flow rate, and heat-pipe operation in real time [12], [43], implicitly performing sensitivity analysis across irradiance, temperature, and wind speed; adaptive control can partially compensate for this variability, but standalone sensitivity analyses and real-condition validation remain rare, making this an early-stage complement to, not substitute for, fluid and geometry optimization. Because control architectures, variable definitions, training data, and validation protocols are not uniformly reported in this literature, they are not tabulated individually here; this subsection is treated as an emerging future-research direction rather than a synthesized finding, and a dedicated review of intelligent PV/T-PCM control is identified as a distinct opportunity for future work. Two variables recur enough to characterize qualitatively: raising flow rate lowers cell temperature but non-linearly, as thermal benefit saturates while pumping power (3) keeps rising, so net efficiency peaks at an intermediate flow rate that shifts lower for higher-viscosity fluids [44]; and PCM's thermal inertia damps temperature excursions from sudden irradiance changes, explaining why PCM designs regulate more stably while microchannel designs respond faster (section 4.4). Systematic sensitivity and transient studies remain scarce and are priorities for section 5.

4.7. Real-world implications and scalability

Combining sections 4.1-4.6, optimized PV/T-PCM systems can lower cell temperature by ~5-32°C and raise electrical efficiency by ~3-19 pp relative to uncooled/water-cooled baselines, with overall efficiency up to 88.86% under favorable combinations [24], [34], [35]. Durability (PCM degradation, nanofluid sedimentation, freeze-thaw damage) remains the principal deployment barrier [25], [45], and scalability depends on standardized testing and fin-PCM integration validated beyond module scale [40], [46]. Efficiency changes are reported here as absolute percentage points (pp), the arithmetic difference between two values (e.g., 12% to 15% is +3 pp), not relative percentage change (that same change is a 25% relative increase); the ranges above and in Table 6 are pp unless stated otherwise, with relative-% sources flagged at first use. Three practical challenges recur: PCM encapsulation against uncontained cycling; fluid/PCM leakage, aggravated in micro-structured multi-joint geometries; and maintenance demand (nanoparticle re-dispersion, pump/seal servicing, freeze-thaw checks). Laboratory efficiency gains should be discounted by this rarely-quantified operations-and-maintenance burden, an obstacle to scaling beyond demonstration installations.

5. CONCLUSION

This work conducted a systematic literature synthesis of more than 100 records, screening and assessing eligible 2010-2024 studies against predefined criteria to evaluate how base fluid type, pipe geometry, and their interaction govern hybrid PV/T-PCM efficiency, using a governing heat-transfer framework to explain mechanistically why the two levers are complements rather than substitutes. Base fluid type and pipe geometry each independently improve efficiency, and their combined application yields the largest reported gains. Nanofluids and encapsulated PCM slurries enhance heat transfer and phase-change kinetics; optimized pipe and PCM-container geometries maximize heat-transfer area, uniformity, and latent-heat use. PV/T-PCM systems occupy a complementary niche centered on transient stability relative to microchannel/nanofluid-only cooling, with favorable configurations achieving payback in under six years, supporting fluid- and geometry-side co-design as a single integrated problem.

This synthesis is constrained by its evidence base: most results derive from laboratory/simulation studies rather than long-term outdoor deployments; uncertainty reporting is rare; and techno-economic outcomes are often modeled rather than validated, so reported ranges should be read as indicative rather than directly comparable. As a synthesis rather than a primary investigation, several sharpening analyses (new contour data, a parametric melting-point/conductivity sweep, standalone sensitivity analyses, and a transient weather-sequence simulation) could not be performed here and are set out below as priorities. Four ranked priorities: i) standardized outdoor testing with consistent uncertainty reporting; ii) durability assessment of PCM, nanofluid stability, and sealing under realistic cycling; iii) integrated fluid-geometry parametric campaigns to move beyond single-study synergy evidence; and iv) AI-assisted adaptive control coupling real-time sensor data with fluid/flow adjustment, extending toward smart-grid-dispatchable thermal storage

as an open research question. Lower-priority are contour-generating campaigns and continued nano-PCM/encapsulation development validated beyond module scale.

FUNDING INFORMATION

Universitas Sebelas Maret provided financial support for this research through the Non-APBN funding scheme under the Penelitian Pascasarjana Magister (PPsM-UNS) Batch 2 program, Agreement Number 973.1/UN27.22/PT.01.03/2026. The authors gratefully acknowledge this financial support.

AUTHOR CONTRIBUTIONS STATEMENT

This journal uses the Contributor Roles Taxonomy (CRediT) to recognize individual author contributions, reduce authorship disputes, and facilitate collaboration.

Name of Author	C	M	So	Va	Fo	I	R	D	O	E	Vi	Su	P	Fu
Diefa Nasywa Aedelia	✓	✓		✓	✓	✓		✓	✓	✓	✓			
Zainal Arifin	✓	✓		✓	✓	✓	✓			✓		✓	✓	✓
Rendy Adhi Rachmanto	✓	✓	✓		✓	✓	✓	✓		✓		✓		
Singgih Dwi Prasetyo	✓	✓	✓			✓				✓	✓	✓		

C : **C**onceptualization
M : **M**ethodology
So : **So**ftware
Va : **Va**lidation
Fo : **Fo**rmal analysis
I : **I**nvestigation
R : **R**esources
D : **D**ata Curation
O : Writing - **O**riginal Draft
E : Writing - Review & **E**diting
Vi : **Vi**sualization
Su : **Su**pervision
P : **P**roject administration
Fu : **Fu**nding acquisition

CONFLICT OF INTEREST STATEMENT

The authors state no conflict of interest.

DATA AVAILABILITY

Data availability does not apply to this paper as no new experimental data were created; the analysis is based entirely on previously published literature cited in the References section.

REFERENCES

[1] A. Qazi *et al.*, "Towards sustainable energy: a systematic review of renewable energy sources, technologies, and public opinions," *IEEE Access*, vol. 7, pp. 63837–63851, 2019, doi: 10.1109/ACCESS.2019.2906402.

[2] C. O. Ujah and P. A. Olubambi, "A comprehensive review of phase change materials for photovoltaic cooling and thermal energy storage," *Journal of Energy Storage*, vol. 160, Jun. 2026, doi: 10.1016/j.est.2026.122002.

[3] R. Reji Kumar, M. Samykano, A. K. Pandey, K. Kadirgama, and V. V. Tyagi, "Phase change materials and nano-enhanced phase change materials for thermal energy storage in photovoltaic thermal systems: A futuristic approach and its technical challenges," *Renewable and Sustainable Energy Reviews*, vol. 133, Nov. 2020, doi: 10.1016/j.rser.2020.110341.

[4] A. Herez *et al.*, "Recent advances in hybrid photovoltaic/thermal (PVT) systems: A comprehensive review of performance, configurations, and emerging technologies," *Energy Conversion and Management: X*, vol. 28, Oct. 2025, doi: 10.1016/j.ecmx.2025.101235.

[5] U. K. Paul, M. S. Mohtasim, M. G. Kibria, and B. K. Das, "Nano-material based composite phase change materials and nanofluid for solar thermal energy storage applications: Featuring numerical and experimental approaches," *Journal of Energy Storage*, vol. 98, Sep. 2024, doi: 10.1016/j.est.2024.113032.

[6] M. T. Chaichan *et al.*, "Effect of different preparation parameters on the stability and thermal conductivity of MWCNT-based nanofluid used for photovoltaic/thermal cooling," *Sustainability*, vol. 15, no. 9, May 2023, doi: 10.3390/su15097642.

[7] S. Y. Herng, M. A. M. Rosli, N. Salimen, S. G. Herawan, and F. Hussain, "Performance evaluation of photovoltaic thermal using MgO nanofluid," *Journal of Advanced Research in Fluid Mechanics and Thermal Sciences*, vol. 109, no. 2, pp. 184–209, 2023, doi: 10.37934/arfmts.109.2.184209.

[8] M. A. Alnakeeb, M. A. Abdel Salam, M. A. Hassab, and W. M. El-Maghlany, "Influence of trapezoidal tube parameters on electrical and thermal performance of hybrid photovoltaic solar panels integrated with phase change materials," *Case Studies in Thermal Engineering*, vol. 65, Jan. 2025, doi: 10.1016/j.csite.2024.105641.

[9] H. Liu, Y. Yang, J. Zhang, and C. Lan, "Optimization study of novel concave and ribbed cooling tubes on PV/T-PCM system performance," *Applied Thermal Engineering*, vol. 281, 2025, doi: 10.1016/j.applthermaleng.2025.128738.

[10] A. Yousuf Bhat and A. Qayoum, "Performance enhancement of Photovoltaic-thermal system using hybrid tubes: An assessment of thermodynamic and thermohydraulic efficiencies," *Applied Thermal Engineering*, vol. 230, Jul. 2023, doi: 10.1016/j.applthermaleng.2023.120652.

[11] M. A. Alnakeeb, M. A. Abdel Salam, M. A. Hassab, and W. M. El-Maghlany, "Numerical study of thermal and electrical performance of a new configuration of hybrid photovoltaic solar panel phase-change material cooling system," *Journal of Energy Storage*, vol. 97, Sep. 2024, doi: 10.1016/j.est.2024.112945.

[12] A. A. Ali *et al.*, "Heat pipe-based thermal management in photovoltaic/thermal systems: recent advances and machine learning-driven performance optimization -a comprehensive review," *Applied Thermal Engineering*, vol. 298, 2026, doi: 10.1016/j.applthermaleng.2026.131009.
[13] Y. Cui, J. Zhu, F. Zhang, Y. Shao, and Y. Xue, "Current status and future development of hybrid PV/T system with PCM module: 4E (energy, exergy, economic and environmental) assessments," *Renewable and Sustainable Energy Reviews*, vol. 158, Apr. 2022, doi: 10.1016/j.rser.2022.112147.
[14] W. Li, J. Kan, W. Zhao, J. Wang, X. Zhang, and J. Zhao, "Economic and life cycle analysis of a photovoltaic thermal application system based on phase change thermal storage," *Applied Thermal Engineering*, vol. 257, Dec. 2024, doi: 10.1016/j.applthermaleng.2024.124261.
[15] S. Saidi, T. Brahim, and A. Jemni, "Experimental advances in photovoltaic-thermal (PVT) systems: a comprehensive review of cooling technologies, materials, and performance optimization," *Solar Energy*, vol. 298, 2025, doi: 10.1016/j.solener.2025.113650.
[16] A. A. R. Alkumait, T. K. Ibrahim, M. H. Zaidan, and A. T. Al-Sammarraie, "Thermal and hydraulic characteristics of TiO2/water nanofluid flow in tubes possessing internal trapezoidal and triangular rib shapes," *Journal of Thermal Analysis and Calorimetry*, vol. 147, no. 1, pp. 379–392, Jan. 2022, doi: 10.1007/s10973-020-10289-7.
[17] Q. Peng, D. Li, X. Sun, J. Li, Y. Zhou, and L. Zeng, "Experimental and numerical investigation on photovoltaic/thermal characteristics of an integrated PV/T-PCM system with metal fin and heat exchange pipe," *Renewable Energy*, vol. 239, Feb. 2025, doi: 10.1016/j.renene.2024.122113.
[18] N. Cojocariu, A. C. Ţugui, B. Pricop, D. Bejan, E. I. Chereches, and A. A. Minea, "Experimental analysis of the thermophysical properties of polyethylene glycol with MgO nanoparticles: Insights into thermal analysis, density, viscosity and isobaric heat capacity," *Thermal Science and Engineering Progress*, vol. 69, 2026, doi: 10.1016/j.tsep.2025.104450.
[19] C. A. Ţugui, N. Cojocariu, B. Pricop, D. Bejan, and A. A. Minea, "Polyethylene glycol nanocolloids as advanced phase change materials for sustainable energy: experimental data on viscosity, density, and isobaric heat capacity," *Polymers*, vol. 18, no. 6, 2026, doi: 10.3390/polym18060673.
[20] M. Kargaran, "Hybrid nano-enhanced phase change materials for passive cooling and carbon-efficient photovoltaic systems," *International Communications in Heat and Mass Transfer*, vol. 172, 2026, doi: 10.1016/j.icheatmasstransfer.2026.110578.
[21] S. Junfeng *et al.*, "Convection heat transfer characteristics of graphene-based phase change microcapsule slurries," Chemical Industry and Engineering Progress, 2018.
[22] M. S. Ghoghaei *et al.*, "A review on the applications of micro-/nano-encapsulated phase change material slurry in heat transfer and thermal storage systems," *Journal of Thermal Analysis and Calorimetry*, vol. 145, no. 2, pp. 245–268, Jul. 2021, doi: 10.1007/s10973-020-09697-6.
[23] O. Kazaz, N. Karimi, S. Kumar, G. Falcone, and M. C. Paul, "Thermally enhanced nanocomposite phase change material slurry for solar-thermal energy storage," *Journal of Energy Storage*, vol. 78, Feb. 2024, doi: 10.1016/j.est.2023.110110.
[24] M. K. Yeşilyurt and Ö. Çomakli, "Encapsulated phase change material slurries as working fluid in novel photovoltaic thermal liquid systems: a comprehensive review," *Iranian Journal of Science and Technology, Transactions of Mechanical Engineering*, vol. 47, no. 4, pp. 1275–1305, Dec. 2023, doi: 10.1007/s40997-023-00599-0.
[25] Z. Arifin, S. D. Prasetyo, Y. Trisnoaji, M. A. M. Rosli, and W. B. Bangun, "Enhancing the durability, efficiency, and sustainability of nanofluid–PCM photovoltaic/thermal systems: Meta analysis of current constraints and future research directions," *Results in Engineering*, vol. 30, Jun. 2026, doi: 10.1016/j.rineng.2026.111082.
[26] V. Tirupati Rao and Y. Raja Sekhar, "Hybrid photovoltaic/thermal (PVT) collector systems with different absorber configurations for thermal management – a review," *Energy & Environment*, vol. 34, no. 3, pp. 690–735, May 2023, doi: 10.1177/0958305X211065575.
[27] H. E. Abdellatif, A. Belaadi, A. Arshad, B. X. Chai, I. M. H. Alshaikh, and D. Ghernaout, "Advancing thermal energy storage: Unravelling the optimal orientation of annular phase change material containers within the tank," *Case Studies in Thermal Engineering*, vol. 68, Apr. 2025, doi: 10.1016/j.csite.2025.105931.
[28] B. Huang, S. Yang, J. Wang, and P. D. Lund, "Optimizing the shape of PCM container to enhance the melting process," *Oxford Open Energy*, vol. 1, Jan. 2022, doi: 10.1093/ooenergy/oiab006.
[29] S. Moench and R. Dittrich, "Influence of natural convection and volume change on heat storage," vol. C, 2022.
[30] X. Hu and X. Gong, "Experimental and numerical investigation on thermal performance enhancement of phase change material embedding porous metal structure with cubic cell," *Applied Thermal Engineering*, vol. 175, Jul. 2020, doi: 10.1016/j.applthermaleng.2020.115337.
[31] Ç. Yıldız, M. Arıcı, S. Nižetić, and A. Shahsavar, "Numerical investigation of natural convection behavior of molten PCM in an enclosure having rectangular and tree-like branching fins," *Energy*, vol. 207, 2020, doi: 10.1016/j.energy.2020.118223.
[32] Usman, M. S. Khan, J. Wang, A. A. Memon, and T. Muhammad, "Investigating the enhanced cooling performance of ternary hybrid nanofluids in a three-dimensional annulus-type photovoltaic thermal system for sustainable energy efficiency," *Case Studies in Thermal Engineering*, vol. 60, Aug. 2024, doi: 10.1016/j.csite.2024.104700.
[33] A. A. Alharbi and A. R. R. Alzahrani, "Enhancement in the electrical efficiency of a photovoltaic thermal system through ternary nanofluids application: Nanomaterial shape effects and phase change material encased in a rectangular block," *Engineering Science and Technology, an International Journal*, vol. 61, 2025, doi: 10.1016/j.jestch.2024.101919.
[34] K. Hosseinzadeh, A. R. Mogharrebi, A. Asadi, M. Paikar, and D. D. Ganji, "Effect of fin and hybrid nano-particles on solid process in hexagonal triplex latent heat thermal energy storage system," *Journal of Molecular Liquids*, vol. 300, Feb. 2020, doi: 10.1016/j.molliq.2019.112347.
[35] M. Modjinou *et al.*, "Performance comparison of encapsulated PCM PV/T, microchannel heat pipe PV/T and conventional PV/T systems," *Energy*, vol. 166, pp. 1249–1266, Jan. 2019, doi: 10.1016/j.energy.2018.10.007.
[36] A. El Ouassidi, O. Ghoulam, M. Alla, K. Amghar, and I. Driouch, "Thermal performance enhancement of photovoltaic modules using geometrically optimized fins in PCM systems," *Next Energy*, vol. 12, Jul. 2026, doi: 10.1016/j.nxener.2026.100735.
[37] B. Huang *et al.*, "Analyzing competing effects between heat transfer area and natural convection to enhance heat transfer in latent heat storage," *Journal of Energy Storage*, vol. 76, Jan. 2024, doi: 10.1016/j.est.2023.109882.
[38] K. Hosseinzadeh, M. Alizadeh, M. H. Alipour, B. Jafari, and D. D. Ganji, "Effect of nanoparticle shape factor and snowflake crystal structure on discharging acceleration LHTESS containing (Al2O3 - GO) HNEPCM," *Journal of Molecular Liquids*, vol. 289, Sep. 2019, doi: 10.1016/j.molliq.2019.111140.
[39] A. F. Farahani, M. H. Hekmat, and S. Saharkhiz, "Influence of geometric similarity in shell-and-tube heat exchangers on thermal performance of nanoparticles-fins combination in melting and solidification improvement of phase change materials," *Journal of Energy Storage*, vol. 153, Apr. 2026, doi: 10.1016/j.est.2026.120850.
[40] W. Lin, Z. Ma, S. Wang, M. I. Sohel, and E. Lo Cascio, "Experimental investigation and two-level model-based optimisation of a solar photovoltaic thermal collector coupled with phase change material thermal energy storage," *Applied Thermal Engineering*, vol. 182, Jan. 2021, doi: 10.1016/j.applthermaleng.2020.116098.

[41] Z. Wang, R. Zheng, L. Zhuang, and L. Huang, "Phase change materials in photovoltaic-thermal systems: prioritized integration with heat pumps and hybrid configurations," *Applied Thermal Engineering*, vol. 302, 2026, doi: 10.1016/j.applthermaleng.2026.131590.
[42] H. Ebadi *et al.*, "Recent developments and innovations in solar chimney power technologies: A focus on the last two decades," *Results in Engineering*, vol. 30, Jun. 2026, doi: 10.1016/j.rineng.2026.110251.
[43] M. K. Paliwal, S. Jakhar, A. Dixit, and V. Sharma, "Technical approaches for enhancing thermal management of hybrid photovoltaic thermal systems: emerging trends and future prospects," *International Journal of Thermofluids*, vol. 27, May 2025, doi: 10.1016/j.ijft.2025.101267.
[44] I. Terrab, N. Rebah, S. Abdelouahed, M. Aillerie, and J.-P. Charles, "Numerical investigation and modelling of controllable parameters on the photovoltaic thermal collector efficiency in semi-humid climatic conditions," *Energy Sources, Part A: Recovery, Utilization, and Environmental Effects*, vol. 44, no. 4, pp. 8760–8776, Dec. 2022, doi: 10.1080/15567036.2022.2125124.
[45] Y. S. Chi *et al.*, "Thermal performance of passive photovoltaic-phase change material cooling systems: Experimental and numerical analysis of fin and panel inclination angles," *Applied Thermal Engineering*, vol. 288, Mar. 2026, doi: 10.1016/j.applthermaleng.2025.129249.
[46] D. C. Montgomery, *Design and analysis of experiments*, 5th ed. New York: John Wiley & Sons, Inc., 2001.

BIOGRAPHIES OF AUTHORS



Diefa Nasywa Aedelia is a researcher and master's student in the Department of Mechanical Engineering at Universitas Sebelas Maret (UNS), Surakarta, Indonesia. She previously pursued and completed a bachelor's degree in Mechanical Engineering Education at Universitas Sebelas Maret. Her research interests include renewable energy technologies, photovoltaic/thermal (PV/T) systems, phase change materials (PCM), thermal engineering, energy conversion, and mechanical design. She can be contacted at email: diefanasywaa@student.uns.ac.id.



Zainal Arifin is a professor in the Department of Mechanical Engineering at Universitas Sebelas Maret (UNS), Surakarta, Indonesia. He earned his bachelor's and doctoral degrees from Universitas Brawijaya and his master's degree from Universitas Gadjah Mada. Since joining UNS in 2000, he has published extensively on renewable energy, nanomaterials, photovoltaic systems, and energy conversion. He can be contacted at email: zainal_arifin@staff.uns.ac.id.



Rendy Adhi Rachmanto is a senior lecturer in the Department of Mechanical Engineering at Universitas Sebelas Maret (UNS), Surakarta, Indonesia. He holds bachelor's, master's, and doctoral degrees in mechanical engineering from Institut Teknologi Sepuluh Nopember (ITS), Indonesia. His research interests include solar energy, hybrid vehicles, combustion engineering, and thermal management. He can be contacted at email: rendy@staff.uns.ac.id.



Singgih Dwi Prasetyo is a lecturer in the Power Plant Engineering Technology Program at State University of Malang, Indonesia. He holds bachelor's, master's, and doctoral degrees from Universitas Sebelas Maret, Indonesia. His research interests include renewable energy, photovoltaic/thermal (PV/T) collectors, computational fluid dynamics (CFD), and thermal energy management. He can be contacted at email: singgih.prasetyo.fv@um.ac.id.