International Journal of Power Electronics and Drive System (IJPEDS)
Vol. 17, No. 4, December 2026, pp. 2556~2569
ISSN: 2088-8694, DOI: 10.11591/ijpeds.v17.i4.pp2556-2569

Energy management of a grid-connected microgrid using heuristic and linear programming approaches: contribution to Morocco's energy transition

Jaouad El Habbazi, Soufiane Badii, Abdelghani Boudaoud, Mounaim Aqil
Engineering and Applied Physics Team (EAPT), Superior School of Technology, Sultan Moulay Slimane University, Beni Mellal, Morocco

Article Info

Article history:

Received Jul 29, 2026
Revised Sep 11, 2026
Accepted Oct 4, 2026

Keywords:

Energy management system
Energy storage system
Grid-connected microgrid
Heuristic technique
Linear programming method
Optimization algorithm

ABSTRACT

This study compares two energy management strategies, a rule-based heuristic controller and a linear programming (LP) optimization scheme with rolling horizon implementation, for a grid-connected industrial microgrid in Morocco, where a structured feed-in framework for surplus PV energy has only recently been introduced. Both strategies are examined on similar PV, load, and tariff data related to the representative clear and cloudy days, with and without surplus energy export, and the results are extrapolated to an annual basis using the region-specific distribution of weather day types for Beni Mellal, Morocco. The LP-based approach provides greater savings on an annual cost than the heuristic approach (14.17% vs. 3.24%), corresponding to estimated monthly savings of up to approximately 4,500 MAD on clear days, but at the cost of twice as many daily battery charge/discharge cycles, raising a trade-off between economic performance and battery degradation. This points to the need for sound and stable feed-in tariff systems to motivate the industrial self-producing entities to dispatch surplus energy during Morocco's energy transition.

This is an open access article under the CC BY-SA license.

Corresponding Author:

Jaouad El Habbazi
Engineering and Applied Physics Team (EAPT), Superior School of Technology
Sultan Moulay Slimane University
Beni Mellal, Morocco
Email: jaouad.elhabbazi@gmail.com

1. INTRODUCTION

The rise in electricity prices in Morocco has pushed energy-intensive businesses toward self-consumption solutions, particularly solar energy, reflecting a broader shift towards renewable technologies in the country [1]. This growth is constrained by regulation: at the time of this study project, there was no framework available for surplus-energy injection, which meant that energy self-producers could sell merely 20% of their excess generation [2], [3] without standardized technical or financial rules. Recently, this deficiency has been addressed by ANRE decision n° 04/26, which proposed a surplus-energy purchase price of 21/18 centimes per kWh (peak/off-peak) for the period of 2026–2027 [4]. Further motivating the present techno-economic assessment. Because no such mechanism existed when this study was designed, reference feed-in tariffs from Spain [5] are used here as a conservative proxy, which is applied to a grid-connected industry with PV generation, an energy storage system (ESS), and load/price profiles.

Energy management strategies for microgrids with renewable generation and storage include rule-based control [6], [7], model predictive control (MPC) [8], fuzzy logic methods [9], AI-based algorithms [10], and methods of mathematical optimization such as dynamic programming [11], linear programming (LP) and

mixed-integer linear programming (MILP) [12], the latter offering an attractive balance of accuracy, computational efficiency, and simplicity for cost-based, linearly constrained problems, which is the framework adopted here. Several other paradigms have also been benchmarked against heuristic baselines with quantified savings: genetic algorithms (17.0–17.7% cost reductions) [13], hybrid fuzzy logic (8.1–16.6%) [14], quantum particle-swarm optimization (9.67%) [15], and MPC with load curtailment [16]. Compared with these, LP offers a lighter, more easily reproducible alternative, without extensive parameter tuning, training data, or stochastic search, while achieving comparable savings for largely linear cost structures.

Most existing heuristic-vs-optimization energy management system (EMS) comparisons [17], [18] evaluate strategies independently of a specific feed-in tariff, over a single representative day rather than an annual, weather-distribution-based analysis, and they hardly ever compare the battery cycling/degradation with monetary benefits obtained, something that has not yet been studied under Morocco's emerging compensation regulations. To address this gap, this paper develops and compares two energy management strategies, a heuristic rule-based approach and an LP-based optimization approach implemented with a rolling-horizon scheme, for a grid-connected industrial microgrid. The main contributions of this work include a fully quantified and reproducible heuristic EMS formulation benchmarked against an LP/rolling-horizon EMS under identical photovoltaics (PV), load, and tariff conditions. The study also provides an explicit comparison of both strategies with and without a surplus-energy compensation tariff, considering both an international reference tariff and Morocco's newly adopted ANRE feed-in tariff. In addition, an annual techno-economic extrapolation is performed based on the region-specific distribution of clear, partly cloudy, and overcast days. Finally, the paper quantitatively discusses the trade-off between the economic benefits of the LP strategy and its higher battery-cycling frequency.

The results indicate that the structured purchase framework increases the value of distributed generation, reduces costs, and promotes investments in renewable energy projects, with the LP approach achieving markedly better economic performance than the heuristic method. Beyond its technical contribution, this assessment is intended to inform the calibration of Morocco's feed-in tariff framework and to support self-producers and policymakers in weighing EMS simplicity against economic performance. The following outlines the structure of the article: i) Section 2 describes the microgrid, data, and EMS strategies; ii) Section 3 presents and discusses the simulation results; iii) Section 4 addresses limitations; and iv) Section 5 concludes with key findings and recommendations.

2. METHOD

2.1. Research design/approach

This study adopts a simulation-based comparative case-study design, evaluating a rule-based heuristic controller and an LP/rolling-horizon scheme under identical PV, load, and tariff conditions. Simulation was preferred over an experimental or field-based approach, as it allows both strategies to be compared under strictly controlled conditions unattainable in a real installation subject to weather and demand variability. The comparison covers two representative day types and is extended to an annual basis using region-specific weather data.

2.2. Materials - data sources

2.2.1. Materials

The study refers to a low-voltage (400 V) grid-connected microgrid setup (Figure 1): a 1 MW PV array, a 3000 kWh/400 kW ESS, and a local load with a fixed 500 kW component and a variable component up to 400 kW (peak demand 900 kW), connected to the grid via a circuit breaker and a 22 kV/400 V transformer. The EMS strategies manage energy flow, PV generation, ESS operation, and grid interaction under operational constraints, with the ESS supplying the load during PV shortages and storing surplus for later use or grid export.

2.2.2. Sources of data and model parameters

The specifications of the ESS shown in Table 1 reflect a typical grid-connected microgrid, where the SOC is controlled to remain between 20% and 80% to preserve battery life. For simulating the PV production in this case, two reference profiles for the photovoltaic geographical information system (PVGIS) irradiance for Beni Mellal have been used for both clear and cloudy days with the irradiance of 800-1,000 W/m^2 in the clear sky days [19] (see Figure 2), while the annual weather-day distribution (≈176 clear, 189 cloudy days/year) is derived from the 30-year ERA5T reanalysis [20] (Figure 3) and used for the annual extrapolation. Load and tariff time series are synthetic industrial profiles at 5-minute resolution (288 points/day, matching the rolling-horizon step), with fixed/variable load components (500 kW/400 kW) and a peak/off-peak tariff structure (see sub-section 3.1.) based on typical Moroccan medium-voltage industrial

schedules. PVGIS irradiance was converted to PV power using the 1 MW rating, with linear interpolation to the 5-minute grid and clipping of negative/unphysical values.

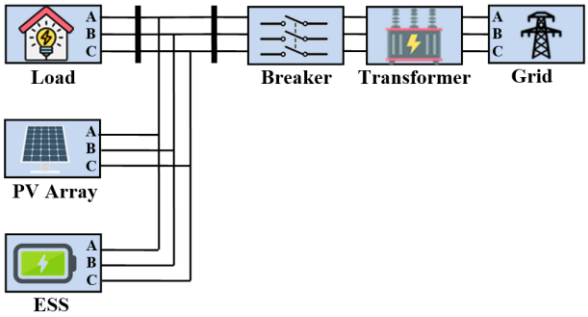

Figure 1. Schematic overview of the microgrid system

Table 1. Specification of ESS parameters

Battery parameters	Typical values
Rated power (KW)	400
Rated capacity (KWh)	3000
Upper charge limit (%)	80
Lower charge limit (%)	20
Initial state-of-charge (%)	50

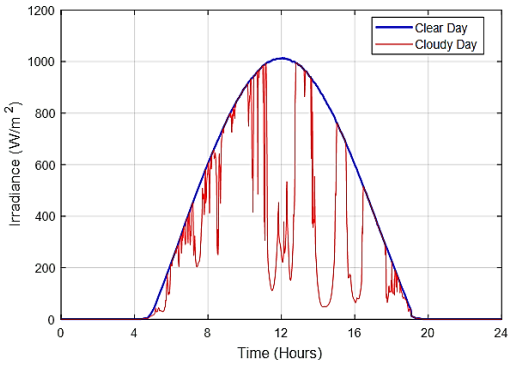

Figure 2. Solar irradiance profiles for clear and cloudy days

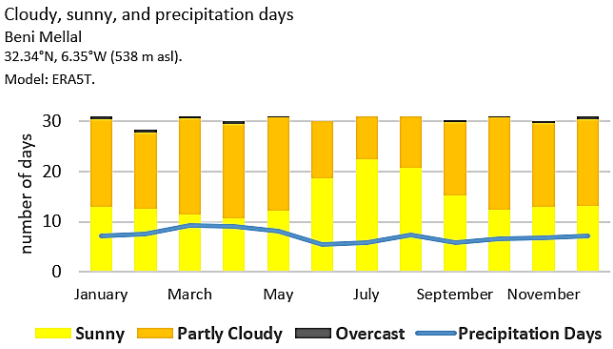

Figure 3. Distribution of sunny, cloudy, and rainy days throughout the months in Beni Mellal, derived from ERA5T data

2.3. Heuristic energy management approach

The heuristic strategy follows predefined rules to make decisions in accordance with the current operating conditions of DG, ESS, and load demand. Its simplicity as well as low computational requirements makes it ideal for on-line energy management in microgrids and industries [21]. The net power P_{net} obtained by subtracting the load demand power P_{load} from the PV output power P_{pv}, as defined by:

$$P_{net} = P_{pv} - P_{load} \quad (1)$$

If P_{net} is greater than zero, it means there is a surplus of PV power; if it is less than zero, the PV power is insufficient to meet the load demand. The EMS will track P_{grid} and the state of charge (SOC) of the battery, while maintaining the SOC to respect the following operational constraint:

$$SOC_{min} \leq SOC \leq SOC_{max} \quad (2)$$

2.3.1. Energy management flowchart

The heuristic EMS decision logic, represented in Figure 4 [22], combines the battery SOC, net power, time-of-day, and tariff periods to identify the operational mode: load shedding occurs when SOC is

minimal and available PV/grid power cannot meet demand, while MPPT is disabled when SOC is maximal and surplus PV cannot be stored or exported. The ESS discharges preferentially during peak hours (16:00–23:00) and charges from the grid during off-peak hours (23:00–05:00), while during 05:00–15:00 MPPT maximizes PV generation and the ESS charges or discharges according to the power balance.

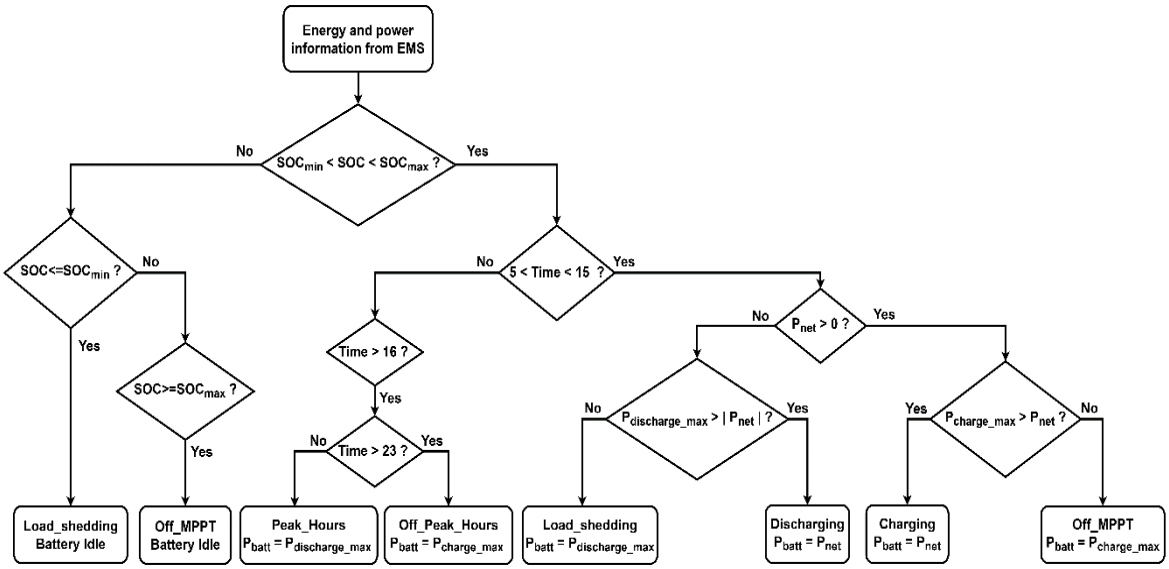

Figure 4. Energy management flowchart

The heuristic decision logic illustrated in Figure 4 can be summarized by the following piecewise definition of the battery power set-point P_{batt}, as a function of SOC, time of day, and net power $P_{net} = P_{pv} - P_{load}$:

- If $SOC < SOC_{min}$ and the deficit exceeds the maximum discharge power: $P_{batt} = 0$ (load-shedding/battery Idle);
- If $SOC > SOC_{max}$ and surplus PV cannot be absorbed: $P_{batt} = 0$ (Off-MPPT/battery Idle);
- For $5h < Time < 15h$ and $SOC_{min} \leq SOC \leq SOC_{max}$: the battery follows P_{net}: charging ($P_{batt} = P_{net}$) when PV exceeds load, switching to Off-MPPT ($P_{batt} = P_{charge_max}$) if the surplus exceeds the charge rating; discharging ($P_{batt} = P_{net}$) when load exceeds PV, switching to Load-shedding ($P_{batt} = P_{discharge_max}$) if the deficit exceeds the discharge rating.
- For $16h < Time < 23h$ (peak hours): $P_{batt} = P_{discharge_max}$
- For $Time > 23h$ or $Time < 5h$ (off-peak hours): $P_{batt} = P_{charge_max}$

2.3.2. Implementing EMS using Stateflow

Stateflow is a graphical modeling tool that allows for the implementation of event-driven and timed control logic by utilizing state transition diagrams and flowcharts. It has been integrated with MATLAB/Simulink to develop, simulate, and verify supervisory control strategies in more complex systems. For this research, Stateflow was utilized to create a heuristic EMS and to confirm that its logic was functioning well enough to be simulated properly [23]. The modeling of the energy management flowchart based on a heuristic strategy in SF is illustrated in Figure 5. This diagram shows the various operating conditions regarding the EMS, where the EMS transitions dynamically through the various operating states based on past net power (the result of PV-generated power minus the load demand), state of charge of the battery, and the time of day [24].

2.4. LP-Based optimization approach

An energy management strategy utilizing LP is proposed [25]. In this method, an objective function and associated system operational constraints are specified. The primary purpose of the method is to reduce reliance on the utility grid by minimizing the cost of electricity purchased from the grid and also fed back to the grid. The method also seeks to maximize the energy stored in the ESS subject to all operational constraints throughout one operational period. The LP model is first introduced generally, and then adapted and described in detail for the MG system under study.

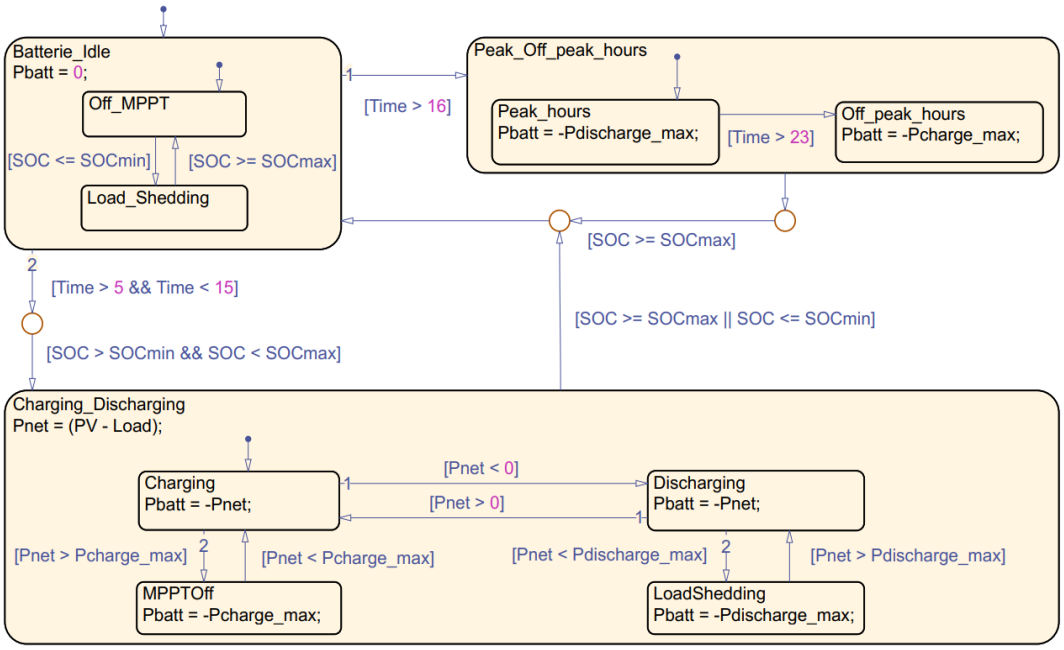

Figure 5. Stateflow chart implementation of the heuristic strategy

2.4.1. LP formulation

In LP, the goal is to minimize a linear objective function while satisfying a series of linear constraints [25], [26]:

$$min\, c^T x \quad subjected\ to: \begin{cases} A_{ineq}.x \leq b_{ineq} \\ A_{eq}.x = b_{eq} \end{cases} \tag{3}$$

In this form, the decision variable vector is indicated by x as shown in (4).

$$x = [P_{grid}(1:N) \quad P_{batt}(1:N) \quad E_{batt}(1:N)]^T \tag{4}$$

In this situation, $P_{grid}(1:N)$ represents the series of grid power values, $P_{batt}(1:N)$ indicates the power exchanged with the battery, and $E_{batt}(1:N)$ indicates the energy retained in the battery during the time horizon from 1 to N.

The objective function parameters are given by the vector c, which is expressed as [25]:

$$c = \Delta T. \begin{bmatrix} P_{grid}(1:N) \\ O_N \\ O_N \end{bmatrix} \tag{5}$$

ΔT is the length of each time step. The parameter matrix A_{ineq} and vector b_{ineq} of the inequality constraints are defined by [25]:

$$A_{ineq} = \begin{bmatrix} 0_{N\times N} & I_{N\times N} & 0_{N\times N} \\ 0_{N\times N} & -I_{N\times N} & 0_{N\times N} \\ 0_{N\times N} & 0_{N\times N} & I_{N\times N} \\ 0_{N\times N} & 0_{N\times N} & -I_{N\times N} \end{bmatrix} \text{ and } b_{ineq} = \begin{bmatrix} P_{max} \\ -P_{min} \\ E_{max} \\ -E_{min} \end{bmatrix} \tag{6}$$

The parameter matrix A_{eq} and vector b_{eq} of the equality constraints are defined by [25]:

$$A_{eq} = \begin{bmatrix} I_N & I_N & O_{N\times N} \\ O_{N\times N} & Y_N & \Phi_N \end{bmatrix} \text{ and } b_{eq} = \begin{bmatrix} P_{load}(1:N) - P_{pv}(1:N) \\ E_{batt}(1) \\ O_{N-1} \end{bmatrix} \tag{7}$$

where the matrices Υ_N and Φ_N are defined by (8) [25].

$$\Upsilon_N = \Delta T.\begin{bmatrix}0 & 0 & 0 & 0\\ 0 & 1 & \cdots & 0\\ \vdots & \vdots & \ddots & \vdots\\ 0 & 0 & \cdots & 1\end{bmatrix} \text{ and } \Phi_N = \begin{bmatrix}1 & 0 & 0 & \cdots & 0\\ 1 & -1 & 0 & \cdots & 0\\ 0 & 1 & -1 & \cdots & 0\\ \vdots & \vdots & \vdots & \ddots & \vdots\\ 0 & 0 & 0 & \cdots & -1\end{bmatrix} \quad (8)$$

2.4.2. Online implementation of the EMS using RH

The rolling horizon (RH) technique is an optimization-oriented control approach derived from model predictive control (MPC). At every time step *i*, the technique solves an LP problem over a moving prediction horizon of N future time steps (*i*, *i*+1, …, *i*+*N*), minimizing the total energy cost while satisfying the requirements of the system. By continuously updating the optimization with the latest available information, the RH technique can be used to tackle the challenge presented by the variability of renewable energy sources, as shown in Figure 6 [27].

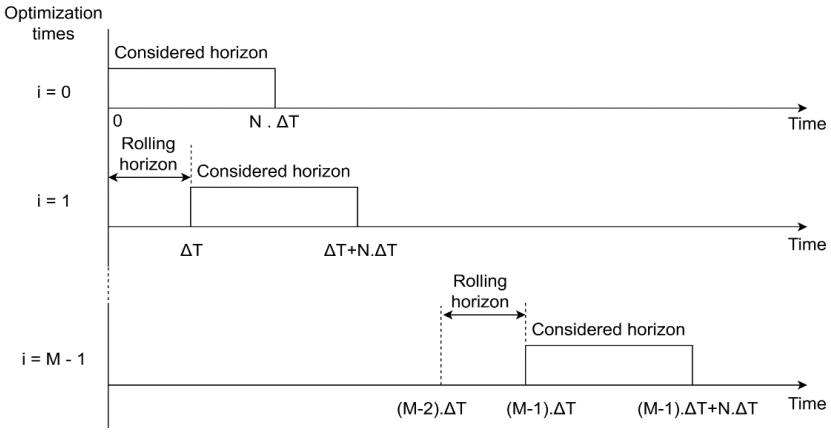

Figure 6. Overview of the RH strategy mechanism

The optimization uses a time resolution of ΔT = 5 min (M = 288 daily intervals) and a 20-hour prediction horizon (N = 241 steps), balancing forecast accuracy with computational cost; PV, load, and price forecasts are formulated as 288×241 matrices, allowing the EMS to update continuously using the latest available predictions [25]. After optimizing the battery power trajectory $P_{batt}(1{:}N)$ over the *N*-step prediction horizon, only the first control action $P_{batt}(1)$ is applied. The horizon then shifts forward, forecasts are updated, and the measured battery SOC becomes the initial condition for the next optimization (Figure 7), enabling real-time adaptation to forecast uncertainty while limiting computational complexity.

The LP and rolling-horizon problems are solved in MATLAB using linprog. The problem is formulated in standard linear-programming form, with the decision vector $x = [P_{grid}(1{:}N) \quad P_{batt}(1{:}N) \quad E_{batt}(1{:}N)]^T$, constructed via the equality constraint vectors A_{eq} and b_{eq} (encoding the power balance and battery energy dynamics) and the inequality constraint vectors A_{ineq} and b_{ineq} (encoding the battery power and energy bounds). Each 20-hour rolling window involves 3N = 723 decision variables (N = 241 time steps), solved using MATLAB's default dual-simplex algorithm for linprog, on a desktop computer equipped with an 11th-generation Intel Core i5 processor.

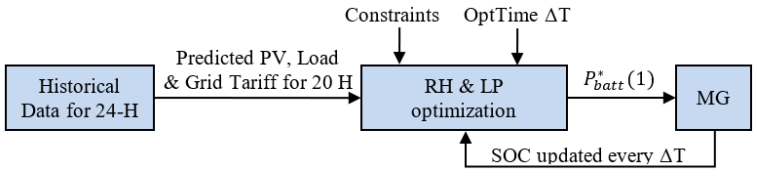

Figure 7. Flow diagram of the EMS with online RH optimization;
The superscript * denotes the battery control actions

2.5. Evaluation strategy

Both EMS strategies are evaluated on identical PV, load, and tariff inputs for clear and cloudy days, using a common set of energy, economic, and operational key performance indicators: grid dependency ratio, total cost with/without surplus sale, SOC-constraint compliance, and charge/discharge cycles (Table 2). Results are then extrapolated annually by sequencing days per the ERA5T-derived weather-day distribution for Beni Mellal (Figure 3), carrying each day's terminal SOC forward as the next day's initial SOC to preserve energy consistency.

3. RESULTS AND DISCUSSION

3.1. Presentation of results

3.1.1. Simulation results using the heuristic approach

– Analysis of energy flow in the MG

To examine the energy behavior of the microgrid under varying weather conditions, simulations were conducted using two distinct PV generation profiles: one corresponding to a clear day and the other to a cloudy day. Figures 8 and 9 illustrate the corresponding energy flow results obtained through a heuristic approach for the clear and cloudy days, respectively. For both cases, the first graph (Figures 8(a) and Figure (a)) illustrates the power variations of the PV system, the grid, the battery, and the load. The second graph (Figures 8(b) and 9(b)) shows the evolution of the ESS state of charge, while the third graph (Figures 8(c) and 9(c)) presents the fluctuations in electricity prices throughout the day.

During the clear day, the battery charges from the grid during the low-price period (0–5h), supports the load until PV exceeds demand (5–8h), then charges from PV surplus (8–14h) before excess PV is exported to the grid after 14h. It discharges during high-price hours (16–20h) to reduce grid purchases, after which the load is again supplied from the grid. The cloudy day follows a similar strategy, but reduced, and more intermittent PV generation causes more frequent grid imports, shortens the battery charging window (9–11h), and requires grid recharging after 23h.

– Economic effects of selling surplus PV energy

Figure 10 compares the 24-hour energy costs for clear and cloudy days with and without exporting PV energy. The heuristic strategy prioritizes battery preservation over grid injection, resulting in estimated monthly savings of approximately 960 MAD and 750 MAD. For both cases, the costs under clear and cloudy days are very similar until 14:00, when no surplus PV energy is exported. Between 14:00 and 16:00, exporting surplus energy reduces the electricity cost, creating a noticeable gap between the two cost curves. After 16:00, both cost curves continue to increase but at a slower rate due to having less surplus PV energy available for injection into the grid.

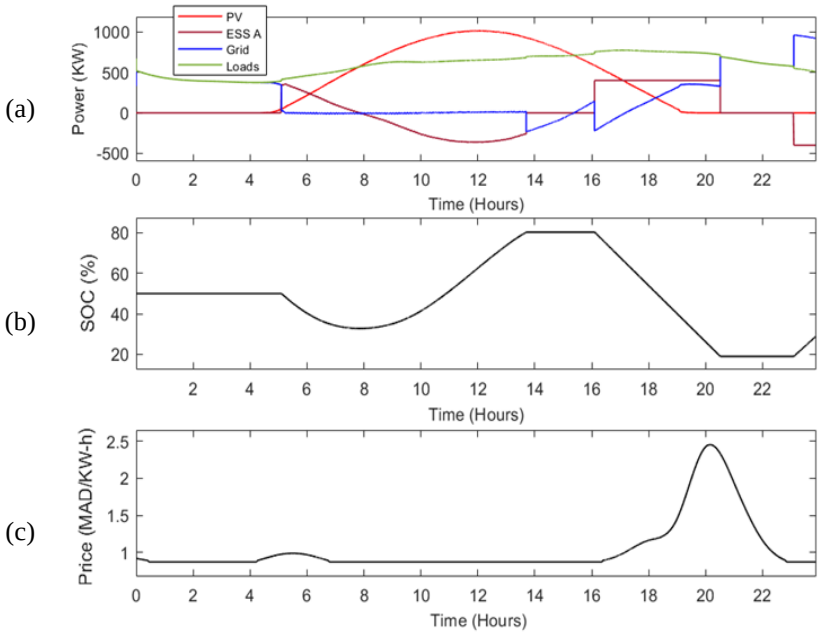

Figure 8. Heuristic-based simulation results for a clear day: (a) power flows including PV generation, ESS, grid, and load; (b) SOC of the ESS; and (c) electricity price (MAD/kWh)

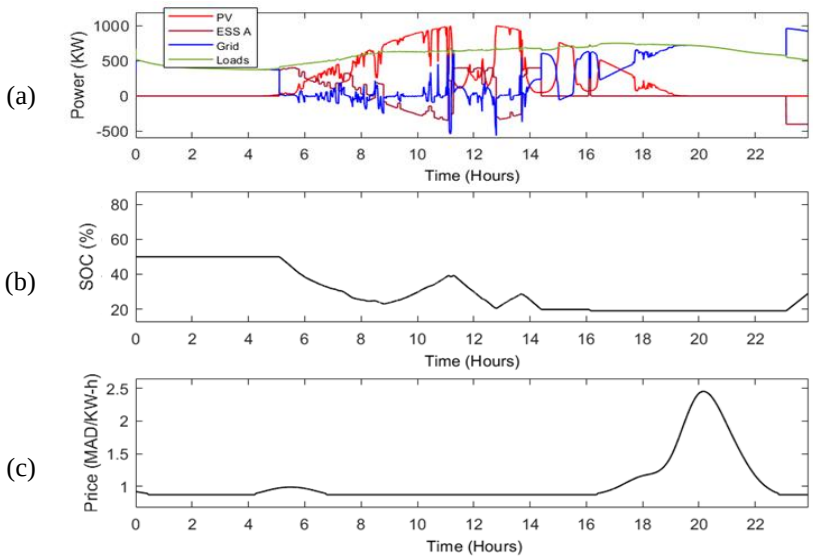

Figure 9. Heuristic-based simulation results for a cloudy day: (a) power flows including PV generation, ESS, grid, and load; (b) SOC of the ESS; and (c) electricity price (MAD/kWh)

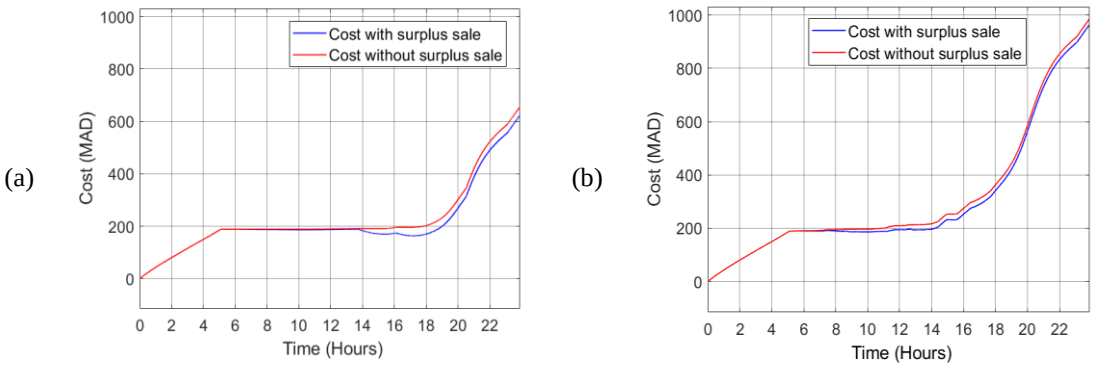

Figure 10. Cumulative grid cost (MAD) using a heuristic approach: (a) clear day and (b) cloudy day

3.1.2. Simulation results using the optimization approach

– Analysis of energy flow in the MG

Similar to the first approach, the simulation results of the energy flow in the MG using the second approach, based on LP, for both a clear day and a cloudy day are presented in Figures 11 and 12. On both clear and cloudy days, the system buys electricity from the grid during 00:30–04:00 to supply the load and charge the battery. Between 04:00 and 08:00, the battery provides support for the load, as PV generation starts to increase. From 08:00 to 12:00, increasing PV production generates surplus energy, while 12:00–16:00 is mainly used to recharge the battery. For the period from 16:00 to 18:00, mainly PV supplies the load, and after 18:00, the battery will discharge to reduce grid purchases during periods of high grid prices. The main difference is that the clear day exports more surplus PV energy, whereas the cloudy day relies more heavily on grid electricity. The main difference between the clear day (Figure 11) and the cloudy day (Figure 12) is in the direction of energy exchange with the grid. On the clear day, more energy was exported to the grid, while on the cloudy day, more energy was imported from the grid to meet load demand.

– Economic effects of selling surplus PV energy

Figure 13 shows that exporting surplus PV energy significantly reduces electricity cost, with average daily savings of 150 MAD (clear day) and 93.4 MAD (cloudy day), equivalent to roughly 4,500 and 2,802 MAD/month. Costs are similar for both scenarios during 00:00–04:00 (no PV), diverge as export reduces costs between 05:00–12:00, converge somewhat as surplus charges the battery (12:00–16:00), and remain lower with export after 16:00 despite declining PV. This integration of surplus-export into the EMS improves cost management and the economic value of renewables, particularly for high-demand industrial users in solar-rich regions like Morocco.

3.2. Analysis and interpretation

3.2.1. Heuristic approach

During the clear day, the ESS undergoes one complete charge/discharge cycle (35%→80% between 8:00–14:00, discharged to 20% between 16:00–22:00), reducing cycling and degradation compared to the LP strategy. On the cloudy day, insufficient sustained PV surplus prevents a full cycle, keeping SOC mostly between 20–50%. Although PV generation fell short of the 14,210-kWh demand in both cases (8,873 kWh clear, 5,868 kWh cloudy) and the battery ended each day at 29% SOC, the resulting net grid imports (4,964 kWh clear, 7,693 kWh cloudy) show the heuristic strategy systematically favors grid purchases over battery cycling when costs are comparable. This conservative behavior still yields a modest daily cost reduction from surplus-PV export (approximately 32 MAD clear, 25 MAD cloudy), showing that even a simple rule-based controller captures part of the economic value of grid injection, though far less than the LP strategy.

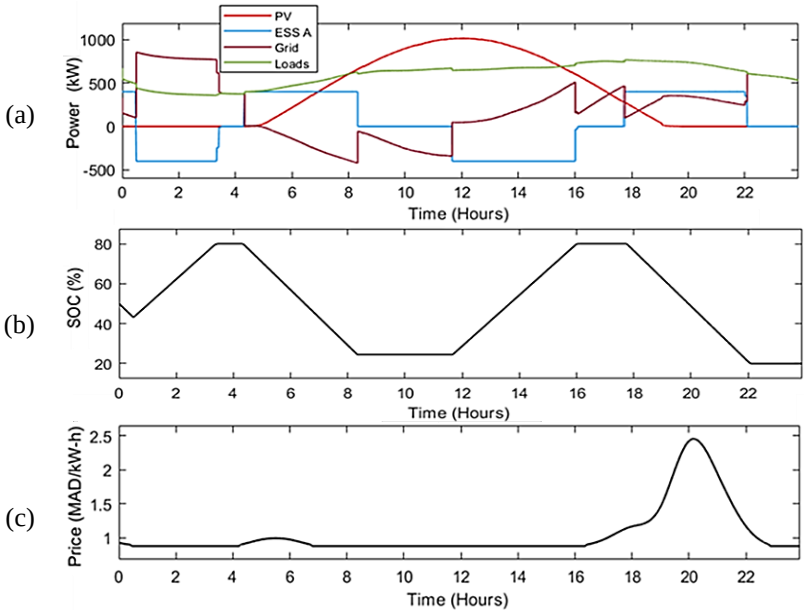

Figure 11. Optimization-based simulation results for a clear day: (a) power flows including PV generation, ESS, grid, and load, (b) SOC of the ESS, and (c) electricity price (MAD/kWh)

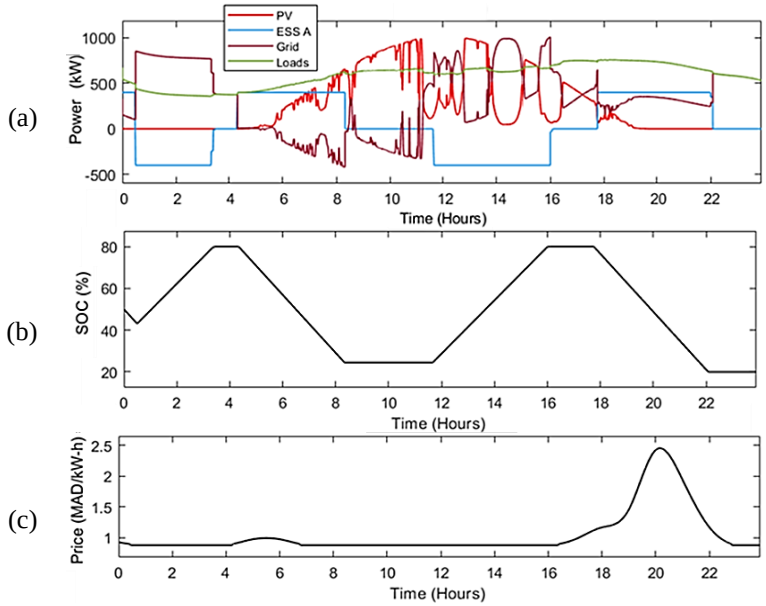

Figure 12. Optimization-based simulation results for a cloudy day: (a) power flows including PV generation, ESS, grid, and load; (b) SOC of the ESS; and (c) Electricity price (MAD/kWh)

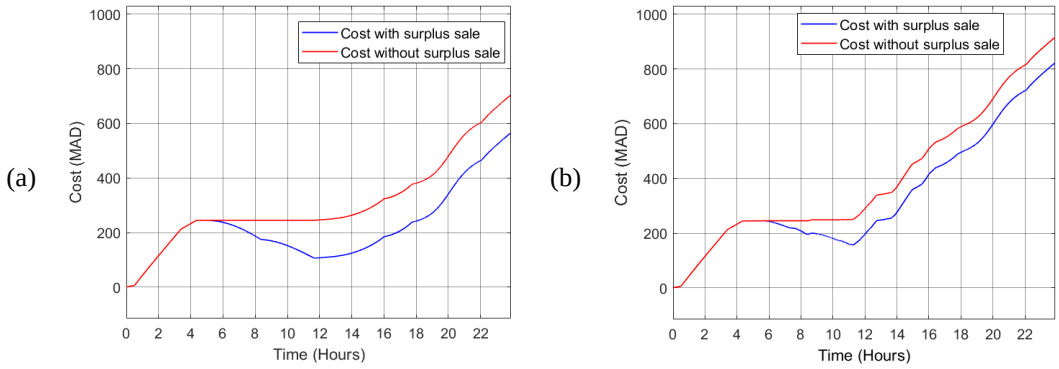

Figure 13. Cumulative grid cost (MAD) using an optimization approach: (a) clear day and (b) cloudy day

3.2.2. LP-based optimization approach

The ESS plays a more active role under the LP strategy: across both clear and cloudy days (14,210 kWh total demand), the battery completes two full charge/discharge cycles (3,000 kWh, 50% SOC), from 00:30 to 08:00 and again from 12:00 to 22:00, instead of the single cycle observed for the heuristic strategy. This more frequent cycling allows the LP strategy to anticipate the peak/off-peak tariff structure and shift energy exchanges accordingly, but also raises a legitimate concern regarding accelerated battery degradation under Morocco's high ambient temperatures; this trade-off is examined in section 4.3, and future work is expected to incorporate an advanced BMS to mitigate it. Using the same PV inputs as the heuristic case (8,873 kWh clear day, 5,868 kWh cloudy day, 14,210 kWh total demand), the battery ends each day at a lower SOC, with net grid imports of 4,867 kWh (34.2%) on the clear day and 7,693 kWh (54.1%) on the cloudy day. Exporting surplus PV energy still provides a clear economic benefit, confirming that the LP's ability to anticipate tariff variations translates into greater realized savings than the heuristic rule.

3.2.3. Comparative interpretation and annual extrapolation

These results show that the LP method outperforms the heuristic method because it anticipates the tariff schedule and solar availability over a 20-hour horizon, allowing it to precisely shift battery charging to low-tariff, high-PV periods and discharging to expensive periods, raising the number of charge/discharge operations to twice a day. Extrapolating the representative clear and cloudy day results to a yearly basis continues to validate this ranking at the annual scale. Table 2 consolidates the daily and annual economic outcomes for both strategies in a single, standardized format, using Beni Mellal's ERA5T-derived weather-day classification (section 2.2). The optimization-based approach achieves a slightly lower grid dependency ratio (44.54% vs. 44.87%) while increasing PV self-consumption, and provides significantly greater annual savings than the heuristic approach. After applying the terminal-SOC restriction described in Section 2.5 to eliminate the identified asymmetry, the LP method's total annual benefit is 14.17%, compared to 3.24% for the heuristic method, confirming that the qualitative ranking is maintained despite the LP method losing some of its advantage relative to the originally reported value.

Table 2. Comparison of selected performance metrics for the two optimization approaches

Criteria/indicators	Heuristic approach	Optimization approach
Energy performance		
Total site energy consumption (kWh)	5,186,650	
Energy supplied by the grid (kWh)	2,327,641	2,310,569
Grid dependency ratio (%)	44.87	44.54
Economic performance — daily		
Daily cost reduction from surplus sale, clear day (MAD)	32	150
Daily cost reduction from surplus sale, cloudy day (MAD)	25	93.4
Economic performance — annual		
Total cost with surplus sale (MAD)	291,993.9	255,018.3
Total cost without surplus sale (MAD)	301,780	297,136.2
Annual gain (%)	3.24	14.17
Operational performance		
SOC range (%)	20-80	
Number of complete charge/discharge cycles	1	2
Initial battery SOC (%)	50	50
Battery SOC at end of day (%)	29	20

3.3. Comparison with previous studies

Table 3 presents the differences in annual cost economies derived from the LP-based and heuristic strategies in the present research with four recent studies on EMS that compare an entirely different optimization scheme with a heuristic or traditional benchmark approach in the similar setup of a grid-connected PV/battery microgrid. In contrast to the present comparison of a rule-based heuristic method with an LP-based rolling-horizon optimizer, these studies provide an entirely new optimization method: genetic algorithm [13], fuzzy logic [14], quantum particle swarm optimization [15], and predictive control [16].

The 14.17%/3.24% annual gap obtained here between the LP and heuristic strategies is within the large range of 8-18%, which occurs for all of the optimization methods mentioned above relative to heuristic or classic benchmarks, while it is closest to 17.0-17.7% as achieved for the use of genetic algorithm scheduling [13]. Specifically, [16] mentions achieving savings of up to 8%, 15%, and 13% when using a heuristic controller on sunny, cloudy, and snowy days, respectively, which clearly reflects the same pattern that was established using the distinction made in this work on clear and cloudy days.

Two other studies follow the same heuristic-versus-LP methodology applied in this study. Molu *et al.* [28] say that the heuristic method costs 4.567% and 8.523% more than the LP approach for clear and cloudy weather, respectively, whereas Shufian and Mohammad [29] say that the LP method has a larger cost advantage of ≈19% compared to the heuristic method. Both, however, are limited to a single representative day without a feed-in tariff scenario or annual extrapolation, which the present study adds. To sum up, this comparison implies that the difference discovered regarding heuristic and optimization-based EMS is a solid qualitative finding throughout various optimization paradigms, although its precise degree relies upon the specific technique, microgrid setup, as well as, as illustrated by the current research, the existence of a straightforward feed-in tariff scenario and annual, weather-distribution-based forecasting.

Table 3. Comparison with previous studies using optimization techniques different from those employed in this study

Study	Optimization technique	Baseline	Reported cost saving
Present study	Linear programming	Heuristic (Stateflow)	3.24% (heuristic) vs. 14.17% (LP)
Nouar *et al*. [13]	Genetic algorithm	Heuristic (state-space)	17.66% and 17.04% cost reduction
Ren *et al.* [14]	Hybrid fuzzy logic controller	Heuristic	8.1% (clear day) / 16.6% (cloudy day)
Paul *et al*. [15]	Quantum particle swarm optimization	Conventional scheduling	9.67% operating-cost reduction
MSFM Yunus *et al.* [16]	Model predictive control (MIQP)	Heuristic controller	8% (sunny) / 15% (cloudy) / 13% (snowy)

4. LIMITATIONS AND UNCERTAINTIES

Both approaches yielded good outcomes, but they have limitations in terms of forecasting accuracy, modeling assumptions, tariffs, and battery deterioration. The optimization-based approach offers better performance but is more sensitive to input data uncertainties than the heuristic method.

4.1. Forecasting and operational uncertainties

The optimization-based method relies on precise predictions of PV generation, load demand, and electricity prices. Uncertainties in forecasting, particularly in solar irradiance and industrial load demand, may result in incorrect scheduling. In contrast, the heuristic method relies on predefined rules and real-time measurements rather than forecasts. This makes it simpler and more robust to prediction errors, although it is less flexible and unable to anticipate future operating conditions compared with the optimization-based approach.

The optimization algorithm sets a battery SOC of at least 20% to overcome forecasting uncertainties. Similarly, the rolling horizon approach is used to adjust scheduling decisions based on the latest available data. Future work will look at the use of stochastic or probabilistic forecasting in improving the robustness of the optimization technique. The study did not take into account various practical constraints, which include load variations, inverter limitations, communication delays, real-time control errors, and regulatory restrictions on grid interconnection in Morocco. These factors may affect the practical implementation and economic viability of surplus PV energy export.

4.2. Tariff sensitivity

The economic performance of the proposed framework depends on the assumed feed-in tariff for surplus PV energy. Since at the time of conducting the study, there was no official feed-in tariff in Morocco, the researchers consequently considered the values of tariffs reported for Spain as a point of reference. Sensitivity analysis showed how the results obtained were sensitive to feed-in tariffs. The results highlight

the need to introduce unambiguous, stable, and legally established feed-in tariffs to increase the financial attractiveness of self-consumption systems. Future studies should evaluate the effects of tariff models on microgrid performance and investment choices.

4.3. Battery degradation and management strategies

The issue of battery aging has a large impact on the techno-economic viability of the proposed approaches. The cycles of charging/discharging, deep discharging, and temperature fluctuation speed up battery aging, reducing system performance and increasing operational costs. Battery aging has not been considered in the study, which could lead to an overestimation of battery lifetime and economic benefits. The absence of a battery aging model is more relevant to the optimization variant, which has a higher number of charge/discharge cycles compared to the heuristic method. Future work should integrate battery degradation models based on real operating data and advanced battery management strategies, such as limiting depth of discharge, temperature control, and cell balancing, to improve the long-term reliability and economic sustainability of microgrids.

5. CONCLUSION

The study was conducted within the context of Morocco's energy transition and the increasing requirement for exporting firms to decarbonize their electricity consumption. Two energy management schemes for a grid-connected MG were assessed, namely, a simple heuristic tool and an optimization-based tool that uses LP with an RH algorithm. The results indicate that the optimization-based scheme is much better in terms of economic and operational efficiency. In simulations, it has been shown that the optimization scheme can save electricity costs as much as 14.17% annually, while the heuristic scheme can only save costs by 3.24%. When data from approximately 320-day climate conditions in Béni Mellal are applied to the yearly savings, the results illustrate the significance of having an incentivizing regulatory framework, as the optimization scheme could save about 4,500 MAD/month for clear days, underscoring the importance of an advanced EMS in conjunction with a supportive regulatory body with clear, stable feed-in tariffs to assist Morocco's energy transition. Beyond quantifying this gap, the present study contributes a fully reproducible comparison of the two strategies, extended for the first time in this line of work to an annual, weather-distribution-based extrapolation and an explicit surplus-energy tariff scenario, situating the economic advantage of LP optimization within a realistic techno-economic and regulatory context rather than a single representative day. Even though the results are promising, both approaches have limitations. Simulations used daily and annual profiles for one specific location and do not completely consider real-time operational dynamics, such as forecast uncertainties, battery aging, and load variations. Feed-in tariffs are based on estimations from neighboring countries since there were no official ones available in Morocco at the time of the study. This adds some uncertainty to the economic evaluation and may affect the interpretation of the results.

Future work could expand on this work with dynamic forecasts, using real meteorological and market data, while also considering battery aging more explicitly over a longer timeline. Additional incorporation would broaden the model and extend the evaluation of EMS performance to more complicated MG and multi-site scenarios. Also, taking into consideration demand-side flexibility, electric vehicles, and sector coupling approaches, for example, thermal systems, multiple optimization strategies can be developed readily. Lastly, working with local authorities to develop fair feed-in tariffs and working on pilot projects from case studies will be important to enable self-consumption and the injection of surplus energy in the Moroccan environment. On this basis, two concrete recommendations follow from this work. For policymakers, the quantified gap between the heuristic and LP strategies illustrates the economic cost of postponing a clear and stable feed-in tariff framework, and supports prioritizing its consolidation as part of Morocco's energy transition roadmap. For industrial self-producers and system integrators, the results support the phased adoption of rolling-horizon optimization-based EMS over simpler rule-based controllers, provided the associated increase in battery cycling is managed through appropriate battery-management safeguards.

FUNDING INFORMATION

Authors state no funding involved.

AUTHOR CONTRIBUTIONS STATEMENT

This journal uses the Contributor Roles Taxonomy (CRediT) to recognize individual author contributions, reduce authorship disputes, and facilitate collaboration.

Name of Author	C	M	So	Va	Fo	I	R	D	O	E	Vi	Su	P	Fu
Jaouad El Habbazi	✓	✓	✓	✓		✓	✓		✓	✓				
Soufiane Badii		✓					✓		✓	✓	✓			
Abdelghani Boudaoud	✓		✓				✓			✓	✓	✓		
Mounaim Aqil	✓	✓		✓		✓	✓			✓		✓		

C : **C**onceptualization
M : **M**ethodology
So : **So**ftware
Va : **Va**lidation
Fo : **Fo**rmal analysis
I : **I**nvestigation
R : **R**esources
D : **D**ata Curation
O : Writing - **O**riginal Draft
E : Writing - Review & **E**diting
Vi : **Vi**sualization
Su : **Su**pervision
P : **P**roject administration
Fu : **Fu**nding acquisition

CONFLICT OF INTEREST STATEMENT

The authors have no conflicts of interest to declare.

DATA AVAILABILITY

The authors confirm that the data supporting the findings of this study are available within the article [and/or its supplementary materials].

REFERENCES

[1] H. El Hafdaoui, A. Khallaayoun, and S. Al-Majeed, "Renewable energies in Morocco: A comprehensive review and analysis of current status, policy framework, and prospective potential," *Energy Conversion and Management: X*, vol. 26, Apr. 2025, doi: 10.1016/j.ecmx.2025.100967.

[2] Autorité Nationale de Régulation de l'Électricité (ANRE), "Décision N°02/25 fixant le tarif d'utilisation des réseaux électriques de moyenne tension de la distribution," Rabat, 2025.

[3] R. Benbba *et al.*, "Solar energy resource and power generation in Morocco: current situation, potential, and future perspective," *Resources*, vol. 13, no. 10, 2024, doi: 10.3390/resources13100140.

[4] Autorité Nationale de Régulation de l'Électricité (ANRE), "Décision n°04/26 fixant le tarif de l'excédent de l'énergie électrique produite dans le cadre des lois n°40-19 et n°82-21," Rabat, 2026.

[5] Red Eléctrica de España (REE), "ESIOS electricity · data · transparency," 2026. https://www.esios.ree.es/en (accessed Jul. 06, 2026).

[6] S. E. Eyimaya and N. Altin, "Review of energy management systems in microgrids," *Applied Sciences*, vol. 14, no. 3, Feb. 2024, doi: 10.3390/app14031249.

[7] B. Modu, M. P. Abdullah, A. Alkassem, and M. F. Hamza, "Optimal rule-based energy management and sizing of a grid-connected renewable energy microgrid with hybrid storage using levy flight algorithm," *Energy Nexus*, vol. 16, Dec. 2024, doi: 10.1016/j.nexus.2024.100333.

[8] Q. Li, X. Zou, Y. Pu, and W. Chen, "Real-time energy management method for electric-hydrogen hybrid energy storage microgrids based on DP-MPC," *CSEE Journal of Power and Energy Systems*, vol. 10, no. 1, pp. 324–336, 2024, doi: 10.17775/CSEEJPES.2020.02160.

[9] D. Arcos-Aviles *et al.*, "An energy management system design using fuzzy logic control: smoothing the grid power profile of a residential electro-thermal microgrid," *IEEE Access*, vol. 9, pp. 25172–25188, 2021, doi: 10.1109/ACCESS.2021.3056454.

[10] A. Safari, M. Daneshvar, and A. Anvari-Moghaddam, "Energy intelligence: a systematic review of artificial intelligence for energy management," *Applied Sciences*, vol. 14, no. 23, Nov. 2024, doi: 10.3390/app142311112.

[11] X. Wang, Y. Ji, J. Wang, Y. Wang, and L. Qi, "Optimal energy management of microgrid based on multi-parameter dynamic programming," *International Journal of Distributed Sensor Networks*, vol. 16, no. 6, Jun. 2020, doi: 10.1177/1550147720937141.

[12] A. Dolara, F. Grimaccia, G. Magistrati, and G. Marchegiani, "Optimization models for islanded micro-grids: a comparative analysis between linear programming and mixed integer programming," *Energies*, vol. 10, no. 2, 2017, doi: 10.3390/en10020241.

[13] Y. Nouar, A. Boukadoum, and O. Boudebbouz, "Optimization of microgrid energy management using a genetic algorithm," *Engineering, Technology & Applied Science Research*, vol. 15, no. 3, pp. 23742–23747, Jun. 2025, doi: 10.48084/etasr.10278.

[14] Renjin, Liyunhe, Gongshenggao, and Biantao, "A hybrid fuzzy logic-based energy management strategy for grid-connected photovoltaic microgrids with energy storage optimization," *Computers and Electrical Engineering*, vol. 131, Mar. 2026, doi: 10.1016/j.compeleceng.2026.110977.

[15] K. Paul *et al.*, "Optimizing sustainable energy management in grid connected microgrids using quantum particle swarm optimization for cost and emission reduction," *Scientific Reports*, vol. 15, no. 1, Feb. 2025, doi: 10.1038/s41598-025-90040-0.

[16] M. S. F. M. Yunus, S. H. Yusoff, S. N. M. Sapihie, M. S. A. Hanifah, T. S. Gunawan, and S. A. Zabidi, "Model predictive control-based energy management system with load curtailment for standalone microgrid," *IIUM Engineering Journal*, vol. 26, no. 1, pp. 169–186, Jan. 2025, doi: 10.31436/iiumej.v26i1.3230.

[17] Z. Ali *et al.*, "Heuristic multi-agent control for energy management of microgrids with distributed energy sources," in *2021 56th International Universities Power Engineering Conference (UPEC)*, Aug. 2021, pp. 1–6, doi: 10.1109/UPEC50034.2021.9548152.

[18] M. B. Sigalo, A. C. Pillai, S. Das, and M. Abusara, "An energy management system for the control of battery storage in a grid-connected microgrid using mixed integer linear programming," *Energies*, vol. 14, no. 19, Sep. 2021, doi: 10.3390/en14196212.

[19] J. R. C. (JRC) European Commission, "JRC photovoltaic geographical information system (PVGIS)," *Photovoltaic Geographical Information System*, 2026. https://re.jrc.ec.europa.eu/pvg_tools/en/#MR (accessed Jul. 06, 2026).

[20] Meteoblue, "Simulated historical climate & weather data for Swartruggens," *MeteoBlue*, 2026. https://www.meteoblue.com/en/weather/historyclimate/climatemodelled/swartruggens_south-africa_3360750 (accessed Aug. 18, 2026).

[21] J. B. Almada, R. P. S. Leão, R. F. Sampaio, and G. C. Barroso, "A centralized and heuristic approach for energy management of an AC microgrid," *Renewable and Sustainable Energy Reviews*, vol. 60, pp. 1396–1404, Jul. 2016, doi: 10.1016/j.rser.2016.03.002.

[22] X. Liu, P. Wang, and P. C. Loh, "A hybrid AC/DC microgrid and its coordination control," *IEEE Transactions on Smart Grid*, vol. 2, no. 2, pp. 278–286, Jun. 2011, doi: 10.1109/TSG.2011.2116162.
[23] MathWorks, "Stateflow." https://in.mathworks.com/products/stateflow.html (accessed Jul. 06, 2026).
[24] M. P. Bakht, Z. Salam, A. R. Bhatti, W. Anjum, S. A. Khalid, and N. Khan, "Stateflow-based energy management strategy for hybrid energy system to mitigate load shedding," *Applied Sciences*, vol. 11, no. 10, May 2021, doi: 10.3390/app11104601.
[25] J. El Habbazi, S. Badii, A. Boudaoud, and M. Aqil, "Energy management of a grid-connected microgrid based on linear programming: a case study of Beni Mellal province," *E3S Web of Conferences*, vol. 649, Sep. 2025, doi: 10.1051/e3sconf/202564901005.
[26] J. Crocker, "An introduction to linear programming (2nd Edition)," *Journal of the Operational Research Society*, vol. 37, no. 4, pp. 438–439, Apr. 1986, doi: 10.1057/jors.1986.75.
[27] Y. Yang, H. Cui, X. Ma, W. Fan, M. Zhu, and S. Yao, "Evaluating the impacts of optimization horizon on the shared autonomous vehicle reservation request system," *Journal of Advanced Transportation*, vol. 2022, pp. 1–19, Jan. 2022, doi: 10.1155/2022/7304148.
[28] R. J. J. Molu, S. R. D. Naoussi, P. Wira, W. F. Mbasso, S. T. Kenfack, and S. Kamel, "Optimization-based energy management system for grid-connected photovoltaic/battery microgrids under uncertainty," *Case Studies in Chemical and Environmental Engineering*, vol. 8, Dec. 2023, doi: 10.1016/j.cscee.2023.100464.
[29] A. Shufian and N. Mohammad, "Modeling and analysis of cost-effective energy management for integrated microgrids," *Cleaner Engineering and Technology*, vol. 8, Jun. 2022, doi: 10.1016/j.clet.2022.100508.

BIOGRAPHIES OF AUTHORS



Jaouad El Habbazi received his bachelor's degree in physical sciences from the Polydisciplinary Faculty, Sultan Moulay Slimane University, Beni Mellal, Morocco, in 2012. He received his engineering degree in electrical engineering from the National School of Applied Sciences, Hassan I University, Khouribga, Morocco, in 2016. Since 2020, he has been teaching electrical engineering at the Higher Technician Diploma Center in Settat, Morocco. He is currently pursuing a doctoral degree and is a member of the Engineering and Applied Physics Team at the Higher School of Technology, Sultan Moulay Slimane University, Beni Mellal, Morocco. His research interests include hybrid microgrids, energy management systems, and energy optimization. He can be contacted at email: jaouad.elhabbazi@gmail.com.



Soufiane Badii is a doctoral student in the Department of Electrical Engineering at the École Supérieure de Technologie, Sultan Moulay Slimane University, Beni Mellal, Morocco. He received his Bachelor of Engineering degree in electronics and computer science from the Faculty of Sciences and Techniques, Hassan II University, Mohammedia, Morocco, in 2012, and his Master of Engineering degree in automation, signal processing, and industrial computing from the Faculty of Sciences and Techniques, Hassan I University, Settat, Morocco, in 2014. Since 2024, he has been pursuing a doctoral degree in applied mathematics and physics at the École Supérieure de Technologie in Beni Mellal. His research interests include photovoltaic battery systems, battery management systems, modular battery systems, and renewable energy. He co-authored a paper titled "Comparative Study between Two BMS Architectures in a PV-Battery Off-Grid: Centralized and Modular Topologies," published in E3S Web of Conferences, volume 649, article 01013, in 2025. He can be contacted at email: badii.soufiane@usms.ac.ma.



Abdelghani Boudaoud was born in Azilal, Morocco, in 1973. He received his Doctor of Philosophy degree in electronics and telecommunications from Hassan I University, Settat, Morocco, in 2019. In 2020, he joined the Department of Mechatronics at the Higher School of Technology, Sultan Moulay Slimane University, Beni Mellal, Morocco, as a professor. His research interests include hardware design of algorithms for information processing and industrial system control. He can be contacted at email: abdelghani.boudaoud@usms.ma.



Mounaim Aqil is a lecturer in the Department of Mechatronics at the Higher School of Technology, Sultan Moulay Slimane University, Beni Mellal, Morocco. He received his Doctor of Philosophy degree in electrical engineering from Mohammed V University, Morocco, in 2018. His research interests include signal processing, embedded electronic systems, and the Internet of Things. He is a member of the Engineering and Applied Physics Laboratory. He can be contacted at email: mounaim.aqil@usms.ma.