International Journal of Power Electronics and Drive System (IJPEDS)
Vol. 17, No. 4, December 2026, pp. 2844~2854
ISSN: 2088-8694, DOI: 10.11591/ijpeds.v17.i4.pp2844-2854

Optimization of RF power transfer in the DECY-13 cyclotron via novel inductive coupler rotation and modular solid-state amplification

Trimarji Atmono[1], Muhammad Husni Santriaji[2], Rizky Fajarudin[3], Tri W. Supardi[2], Agus S. Wismogroho[1], Muhamad Ikhlasul Amal[1]
[1]Research Center for Nanotechnology System, National Research and Innovation Agency (BRIN), Banten, Indonesia
[2]Department of Computer Science and Electronics, Faculty of Mathematics and Natural Sciences, Universitas Gadjah Mada, Yogyakarta, Indonesia
[3]Research Center for Accelerator Technology, National Research and Innovation Agency (BRIN), Banten, Indonesia

Article Info

Article history:

Received Aug 14, 2026
Revised Sep 23, 2026
Accepted Oct 4, 2026

Keywords:

Cyclotron RF system
DECY-13 cyclotron
High-power RF generator
Impedance matching strategy
Solid-state driver amplifier
Wilkinson power combiner

ABSTRACT

The development of high-power radiofrequency (RF) amplifiers is essential for ensuring the stable and efficient operation of compact cyclotrons across the medical, industrial, and research sectors. This paper presents the design, fabrication, and performance characterization of a high-power combined solid-state driver amplifier. By utilizing a Wilkinson-based combiner to integrate two 1 kW BLF188XR pallets, we realized a driver system capable of delivering nearly 2 kW at 77.76 MHz with stable operation. By utilizing a specially designed coupler and a unique rotation technique relative to the dee, we successfully eliminated the imaginary impedance components, thereby achieving maximum power transfer and a near-ideal 50-ohm resistive match. The experimental results confirm that this upgraded driver enables the final 3CX15000A7 triode amplifier to achieve a stable output of up to 10 kW, supporting reliable proton acceleration to 13 MeV for the DECY-13 cyclotron in Yogyakarta.

This is an open access article under the CC BY-SA license.

Corresponding Author:

Muhammad Husni Santriaji
Department of Computer Science and Electronics, Faculty of Mathematics and Natural Sciences
Universitas Gadjah Mada
Yogyakarta 55281, Indonesia
Email: muhammad.husnisantriaji@ugm.ac.id

1. INTRODUCTION

Cyclotrons serve as essential compact particle accelerators, utilizing synchronized alternating electric and magnetic fields to propel charged particles toward high energies. These machines are indispensable for medical isotope production, industrial applications, and fundamental nuclear research because of their high efficiency and relatively small operational footprint compared with large-scale accelerator complexes. At the heart of Indonesia's nuclear advancement is the design experimental cyclotron in Yogyakarta (DECY-13), a 13 MeV facility where operational reliability is tethered directly to the stability and efficiency of its radio frequency (RF) systems, which generate the alternating electric fields required for ion acceleration [1], [2]. From a power-electronics perspective, the same system-level objectives—efficient power transfer, controlled reactive loading, thermal management, and reliable operation—also arise in high-power converters and electric drives, although the operating frequencies and load physics are different.

The RF power generator is a critical subsystem responsible for delivering the high-frequency alternating voltage required by the resonating dee cavity. Typically composed of an exciter or direct digital

synthesizer (DDS), driver amplifier, and high-power final amplifier tube [3]-[6], the system must collectively deliver approximately 10 kW to sustain DECY-13 operations. Although the final stage employs a 3CX15000A7 triode capable of such levels [7], its reliability is fundamentally limited by the quality and power of the signal provided by the preceding driver stage. Ensuring a perfect 50 Ω impedance match across this chain is vital for minimizing power losses [8] and protecting the system from the complex load environment of the ion beam, vacuum, and cooling systems [9], [10]. For DECY-13, the legacy driver output of approximately 700 W therefore leaves limited drive margin for the final stage, motivating the upgrade evaluated in this work.

Existing research highlights persistent engineering hurdles in the management of high-power RF generation. For instance, Bora *et al.* [11] documented the extensive challenges involved in the indigenous design of a 200-kW ion cyclotron resonance heating system, emphasizing that stability at these power levels requires rigorous impedance control. Furthermore, the broader nuclear industry is increasingly moving toward modularity to enhance system resilience. As demonstrated in recent studies on small modular reactors (SMRs), modularization allows for improved reliability and frequency stability within energy grids [12]. We propose that this modular philosophy is equally applicable to the accelerator subsystems. In traditional RF architecture, vacuum tubes have long been the standard for high-power applications owing to their high-voltage handling. Although an individual solid-state device has lower output-power capability than a large electron tube, multiple solid-state RF power-amplifier modules can be combined to obtain multi-kilowatt output while retaining modularity [13]-[18]. At the system level, paralleling RF amplifier modules has a useful analogy with modular converter architectures, where repeated power cells are combined to scale capacity and improve serviceability; RF implementation additionally requires phase and amplitude balance, port isolation, and controlled impedance [19].

Within the DECY-13 facility, the original driver stage produced only ~700 W from an 11 W DDS input. Earlier DECY-13 measurements likewise identified the driver, coupler position, and Smith Chart-based matching as critical elements in the 77.78 MHz RF chain [20]. This mismatch can reduce efficiency and raise concerns regarding the longevity of the final triode and overall operational stability. The practical gap for DECY-13 is therefore not simply higher amplifier power, but a retrofit that increases the driver power while retaining the existing final stage and providing a matching procedure compatible with the existing cavity. To resolve this bottleneck, we developed a combined driver amplifier using a Wilkinson-type configuration that parallels two 1000 W BLF188XR solid-state pallets. This redesign increased the driver output to ~2 kW, thereby reducing the strain in the final stage and improving the operational stability of the RF chain. The modular strategy is consistent with accelerator RF systems that scale output through the combination of multiple solid-state modules [13]-[18].

The objective of this study is to present the design, construction, and characterization of this combined driver amplifier for the DECY-13 cyclotron. Existing matching approaches include stub-line networks for cyclotron RF amplifiers [21], optimization of input-coupler geometry and position [22], electronically or adaptively tuned impedance networks in other RF systems [23], [24], and, in a recent cyclotron operating near 77.8 MHz, adjustment of the reflection coefficient by rotating the coupler loop [2]. Against this background, the novelty claimed in this work is the DECY-13-specific integration of a modular Wilkinson-combined driver, custom high-power polytetrafluoroethylene (PTFE) coaxial capacitors, and a multistage matching procedure that combines mechanical coupler rotation with capacitive fine-tuning for the existing cavity. These elements allow precise capacitance tailoring and practical impedance adjustment at 77.76 MHz while retaining the legacy final amplifier. By integrating experimental validation with analytical Smith Chart analysis, this study provides a scalable framework that informs future upgrades in compact cyclotron facilities worldwide.

2. METHOD

2.1. System overview

Figure 1 shows the block diagram of the driver as part of the RF generator for cyclotron DECY-13. The RF architecture of the DECY-13 cyclotron necessitates a high-performance driver stage capable of bridging the power gap between a low-level DDS and the demanding input requirements of a high-power triode final amplifier. The legacy driver system (Figure 2), which relies on a single FM BLF188XR pallet, is fundamentally limited to a maximum output of approximately 700 W. This limitation proved insufficient to achieve stable 10 kW operation, as the final stage lacked the excitation required to maintain consistent accelerating voltages [20]. To address this, we developed a modular combined driver amplifier utilizing a Wilkinson-type power splitter and combiner network, a design philosophy increasingly favored in modern accelerator facilities owing to its inherent balance and isolation characteristics [1], [3], [13], [17], [25]. This approach aligns with broader trends in nuclear technology, where modularization is employed to enhance both reliability and system flexibility [12]. The redesigned driver is responsible for precisely amplifying the 77.76 MHz signal from the DDS while maintaining a rigorous 50 Ω impedance environment and suppressing spectral noise that could otherwise destabilize the cyclotron beam.

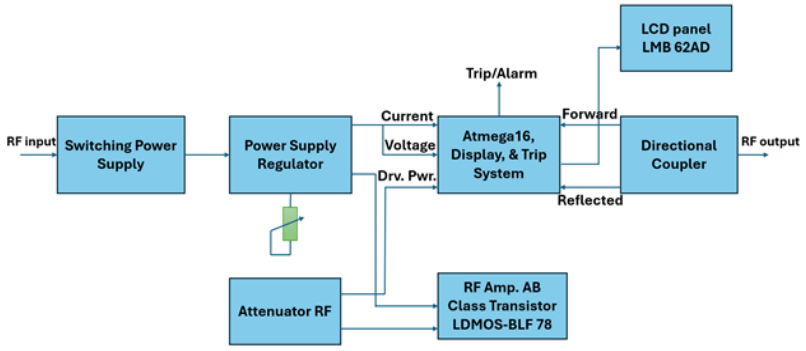

Figure 1. Block diagram of the RF power system for the DECY-13 cyclotron

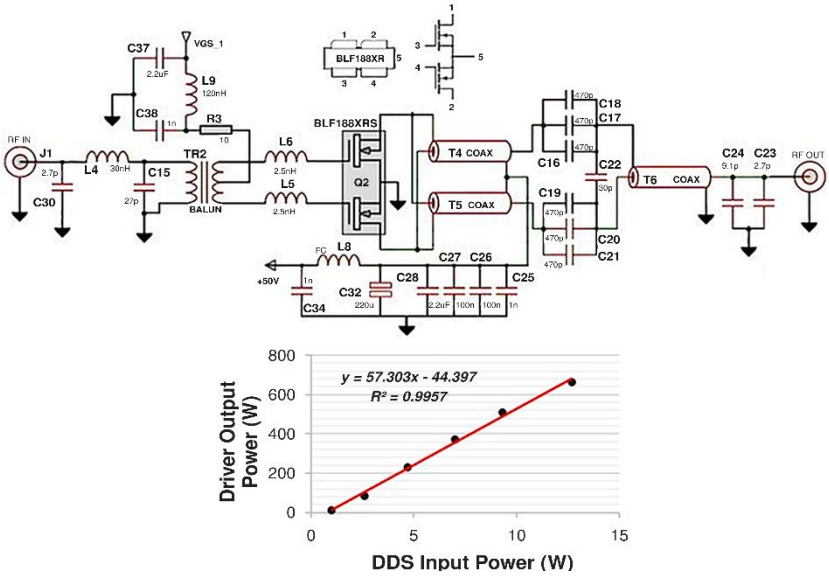

Figure 2. Circuit schematic and measured output power of the original single-pallet driver amplifier

2.2. Design of the combined driver amplifier

The core of the upgraded driver consists of two high-gain BLF188XR-based solid-state amplifier pallets, each rated for a nominal output of 1000 W [26]. Figure 3 shows the modified solid-state driver amplifier. These modules were integrated using a Wilkinson configuration at both the input and output stages to ensure an equal power distribution and port-to-port isolation [27]. This topology is particularly robust to imbalances; any reflected power from a single branch is dissipated through an isolation resistor rather than fed back into the opposing amplifier module, thereby preventing cascading failures and ensuring broadband matching. Multi-module solid-state RF amplifiers use the same general combination principle to scale output power, while requiring close branch balance to preserve combining efficiency [28].

A primary engineering innovation in this system is its departure from conventional off-the-shelf matching components. Given the high-power density and thermal demands of the 77.76 MHz operating frequency, we developed custom-fabricated coaxial capacitors engineered from high-grade PTFE cable segments. PTFE was used as the dielectric in these custom segments. Unlike standard fixed capacitors, these coaxial segments allowed for "micrometric" tailoring of the capacitance values during the assembly phase. By precisely trimming the length of the PTFE segments, we could achieve the exact reactive compensation required to fine-tune the impedance match across the driver's operating bandwidth. The combiner geometry was governed by the characteristic impedance equations, where each branch (Zc) was calculated to satisfy $Zc = \sqrt{2} \times R0$, ensuring a seamless transition to the 50 Ω system impedance [27]. In high-frequency power converters, parasitic inductive and capacitive paths are recognized contributors to conducted electromagnetic interference (EMI) [29]-[31]; however, the custom PTFE capacitors in this work are reactive matching components rather than dedicated EMI filters, and no formal EMI/electromagnetic compatibility (EMC) compliance measurement is claimed.

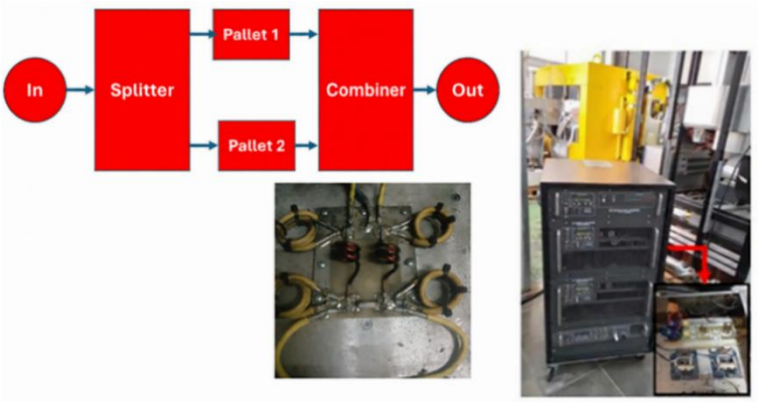

Figure 3. Configuration and hardware implementation of the combined solid-state driver amplifier

2.3. Integration with the final amplifier

The output from the Wilkinson combiner is coupled directly to the grid of a 3CX15000A7 triode electron tube, which functions as the final RF power stage of the DECY-13 cyclotron [7]. In the original 700 W configuration, the triode was forced to operate at the edges of its performance envelope to compensate for the low drive power. By elevating the driver output to approximately 2 kW, we significantly lowered the required drive burden on the final amplifier. This higher drive level allows the triode to achieve its target 10 kW output with increased drive margin. This master-oscillator power-amplifier (MOPA) configuration preserves the RF signal generated by the solid-state driver through the final high-power stage, which is essential for maintaining excitation close to the cyclotron cavity resonance.

2.4. Experimental setup

To validate the performance of the combined driver, we constructed a dedicated experimental test bench, illustrated in Figure 4, as a block diagram. The setup utilized a high-precision DDS signal source at 77.76 MHz with an adjustable output range (0–12 W), feeding dual Wilkinson stages. Real-time monitoring was facilitated using a vector network analyzer (VNA) to track the return loss and impedance trajectories on a Smith Chart. Forward and reflected power levels were monitored via high-power directional couplers and calibrated RF power meters, while a 10-kW dummy load was employed to safely dissipate energy during continuous-wave (CW) stability testing. This validation setup follows the same measurement principles used in prior DECY-13 impedance and high-voltage characterization [8], [20]. The system was stressed across varying input levels to evaluate its gain linearity and the effectiveness of the thermal management system under full-load conditions.

2.5. Impedance matching strategy and novel coupler technique

A critical component of this methodology is the multistage impedance-matching protocol developed to interface the driver with the resonating dee cavity. Because the cyclotron load is inherently reactive, affected by the vacuum environment and the presence of the ion beam, achieving maximum power transfer requires precise cancellation of imaginary components. Cyclotron RF systems have used stub-line matching and coupler-geometry optimization to control the source-load interface [21], [22], while combiner optimization can reduce reflected-power stress in modular solid-state amplifiers [32].

To achieve this, we implement a rotation technique using a specifically designed inductive coupler. By mechanically rotating the coupler's position relative to the dee electrode, we were able to physically vary the mutual inductance and neutralize the inductive reactance of the system. Any residual capacitive reactance was then compensated using a high-voltage variable capacitor (fine tuner) positioned near the dee. This combined coarse and fine adjustment strategy, leveraging both mechanical rotation and electrical tuning, allows the elimination of the imaginary parts of the impedance of the load. In the DECY-13 implementation, the contribution is the integration of this mechanical adjustment with the fine tuner and upgraded modular driver; under the tested condition, the procedure brought the load close to a 50 Ω resistive match [8].

2.6. Data collection and analysis

Data acquisition was performed systematically over several test runs, with the DDS input power scaled from 5 W to 11 W. We recorded the resulting driver output, final amplifier anode current, and corresponding dee voltage developed within the cavity. The analysis utilized the measured Smith Chart data to quantify real and imaginary impedance components, providing a mathematical baseline for tuning adjustments. The equivalent resistor-inductor-capacitor (RLC) treatment and Smith Chart analysis in this paper are lumped-parameter interpretations of measured impedance rather than full-wave electromagnetic

simulations. The reported measurements therefore do not constitute a continuous simulated impedance trajectory versus coupler angle. By correlating the forward/reflected power ratios with the physical positions of the coupler and fine-tuner, we validated the matching procedure and its ability to maintain stable resonance throughout the DECY-13 operational cycle [20].

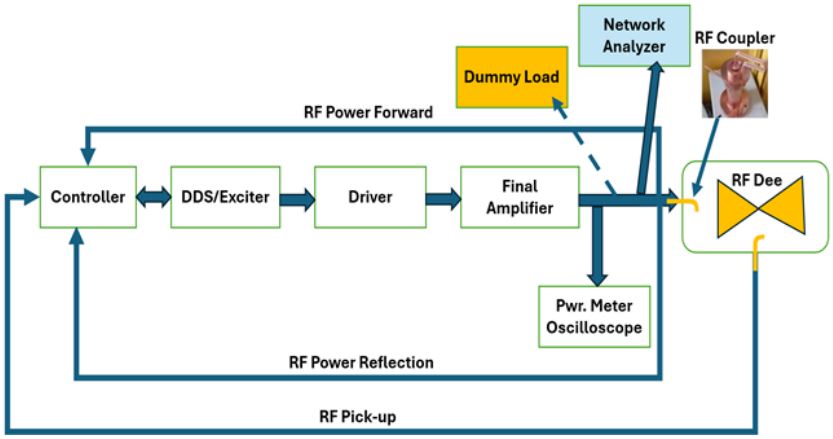

Figure 4. Experimental setup for testing the modification of the driver amplifier

3. RESULTS AND DISCUSSION

3.1. Performance of the original driver amplifier

The performance evaluation began with a baseline characterization of the legacy RF driver at the DECY-13 facility. This initial system, which utilized a single BLF188XR pallet amplifier, achieved a maximum output power of approximately 700 W when driven with a peak output of 11 W from the DDS source. Although this configuration provided the basic functionality required for early commissioning tests, it proved insufficient for reliably exciting the 3CX15000A7 triode in the final amplifier stage [7]. The resulting power deficit placed the final amplifier under increased operational strain and raised concerns regarding the long-term integrity of the triode tube. Furthermore, the lack of sufficient drive power hindered the cyclotron's ability to maintain the stable dee voltage necessary for consistent 13 MeV proton acceleration. Similar challenges have been reported in other medium-energy cyclotron facilities, where RF stability and impedance control are important for reliable operation [1], [10]. These baseline findings confirm that a modular, high-power upgrade is essential to meet the facility's performance targets.

3.2. Output power and gain of the combined driver

The implementation of the redesigned combined driver yielded an immediate and substantial improvement in available RF power. Figure 5 shows each of Driver 1 and Driver 2, as well as the measurements of the new combined driver. Testing across a DDS input power range of 5–11 W demonstrated that the combined driver consistently delivered stable output power levels in the 2-kW range. Specifically, at an 8 W input, the amplifier reached a total output of ~2000 W, representing an effective gain factor of approximately 250, representing nearly a threefold improvement over the original single-pallet design. Comparable multi-module laterally diffused metal-oxide-semiconductor (LDMOS) RF amplifiers have also demonstrated kilowatt-class output through parallel power combination [18], [28].

This enhanced driving capability fundamentally shifted the operational regime of the final stage. By providing a robust ~2 kW signal to the 3CX15000A7 triode, the system produced approximately 7 kW of RF power under standard operating conditions, as shown in Figure 6. By adjusting the anode voltage to 7 kV, the final amplifier successfully approached the 10-kW threshold required for continuous DECY-13 operation. These results are consistent with other accelerator RF systems in which robust driver and solid-state power stages sustain kilowatt-level RF fields [3], [4]. The upgrade effectively removed the previous operational bottleneck, ensuring that the cyclotron could maintain the power levels required for stable ion acceleration.

3.3. Efficiency and stability

The primary focus of this redesign was to increase the available driver power and improve the stability of the RF chain. The Wilkinson combiner played a pivotal role by ensuring that the power from both solid-state pallets was integrated effectively while maintaining high port-to-port isolation to suppress mutual interference [27]. Measurements obtained during the commissioning phase showed that the combined driver

maintained a stable output with minimal power fluctuations across the test range. Furthermore, the reflected power levels were notably reduced, demonstrating that impedance-matching strategies are highly effective [32]. Comparable cyclotron cavities use coupler and fine-tuner arrangements to obtain the required matching [33], while modular solid-state accelerator amplifiers demonstrate the scalability of kilowatt-class RF generation [34]. No harmonic spectrum, THD, or phase-noise data are reported in this study; therefore, spectral purity is not quantified here, and no EMI/EMC performance claim is made from these measurements.

Thermal behavior was also observed qualitatively during extended CW operation at peak output, during which the combined driver exhibited consistent performance without signs of overheating. This stable operation was observed with the custom PTFE coaxial capacitors and high-power RF resistors used in the matching network. Similar thermal concerns are well documented for high-power cyclotron RF cavities [9], [10]. The present dataset does not provide mean time between failures (MTBF) or a numerical before/after thermal-drift metric, so reliability improvement is evaluated here from sustained CW operation and the increased RF drive margin rather than from lifetime statistics.

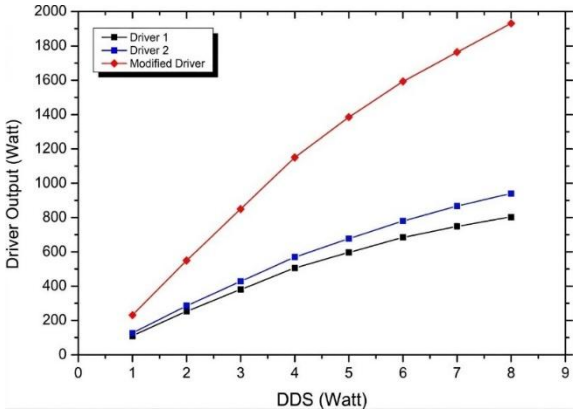

Figure 5. Driver output as a function of DDS

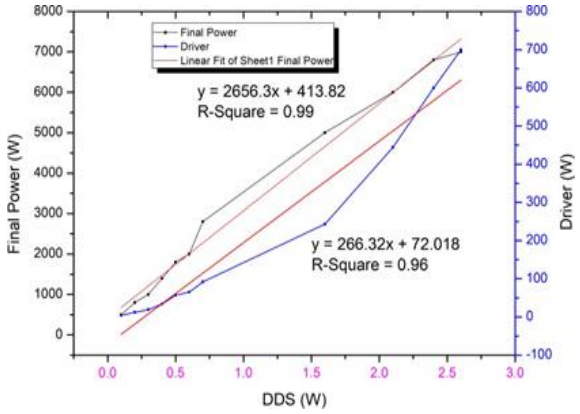

Figure 6. The dependence of RF final power and combined driver from DDS

3.4. Smith chart analysis and impedance matching

The impedance behavior of the RF system was meticulously analyzed using a network analyzer to ensure the maximum power transfer to the resonating cavity. As shown in the Smith Chart plots (Figure 7), the system initially exhibits complex impedance characteristics with both inductive and capacitive components. For example, the measurements indicated a load impedance of $Z = 50 + j30\ \Omega$ at 77.76 MHz, corresponding to an inductive reactance of 30 Ω. This measurement-based interpretation is consistent with RF-cavity studies that combine measured S-parameters or impedance with cavity modeling and tuning analysis [35].

We employed an analytical derivation to quantify the compensation required to move beyond empirical tuning toward a more rigorous methodology. Using the relation $XL = \omega L$, with $\omega = 2\pi \times 77.76 \times 10^6$ rad/s, the inductive component was calculated as $L \approx 61.3$ nH. This calculated value provided the precise physical parameters required to adjust the length of the custom PTFE coaxial segments in the matching network to cancel the reactive mismatch. The calculation complements the measured Smith Chart data and provides an analytical basis for the tuning adjustment rather than a full-wave simulation.

The tuning process involved rotating the specially designed coupler to minimize inductive contributions, followed by fine adjustment of the variable capacitor located near the dee electrode to neutralize the residual capacitive reactance (Figure 8) [8], [22]. This multistage protocol successfully brought the system to a near-ideal resistive 50 Ω match, satisfying the maximum power transfer condition. The success of this tuning was further confirmed by the significant reduction in reflected power and enhanced forward power transmission into the cavity. Similar matching considerations are essential in compact medical cyclotrons and other accelerator RF cavities [1], [10], [33].

3.5. Comparative analysis with similar systems

The performance of the DECY-13 upgrade aligns with advancements in other high-power RF systems for nuclear applications. For instance, the successful commissioning of high-power ion cyclotron resonance heating (ICRH) systems emphasizes the necessity for robust RF generation and rigorous impedance control [11]. Although our power scale is lower, the underlying engineering principles for ensuring stable drive stages are directly comparable. Solid-state architectures are increasingly favored over tube-only designs

due to their modularity, efficiency, and ease of maintenance [13]-[18], [34], [36], [37]. The Wilkinson-based approach demonstrated herein provides a scalable framework, suggesting that future upgrades could involve integrating additional amplifier pallets to further increase the available RF power. The same solid-state RF design principles are relevant to other high-power accelerator and plasma-heating systems [11], [36], [38]. At a system level, this modularity parallels fault-tolerant modular converters, where repeated power cells support scalability and service continuity [19], [39]. In RF implementations, however, additional pallets also require phase/amplitude balance, combiner isolation, thermal handling, and reflected-power management [32], [34].

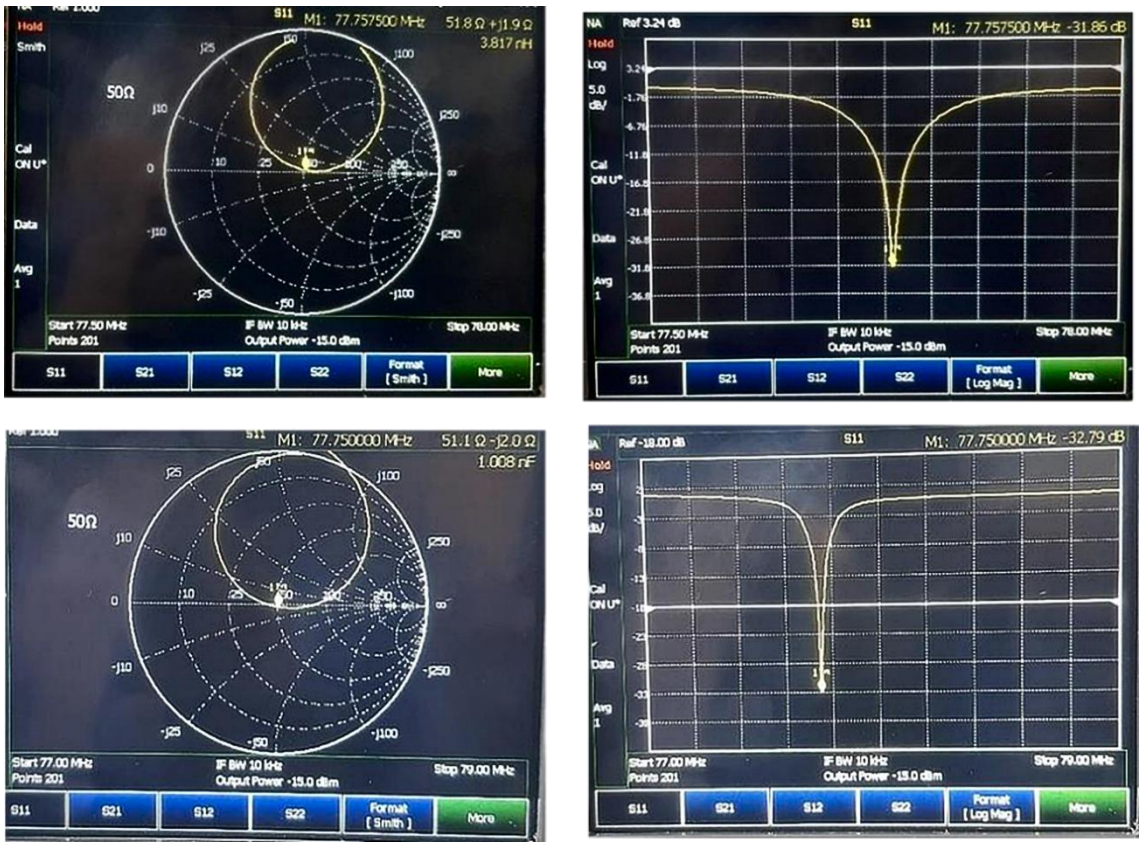

Figure 7. Smith Chart curve detected by network analyzer

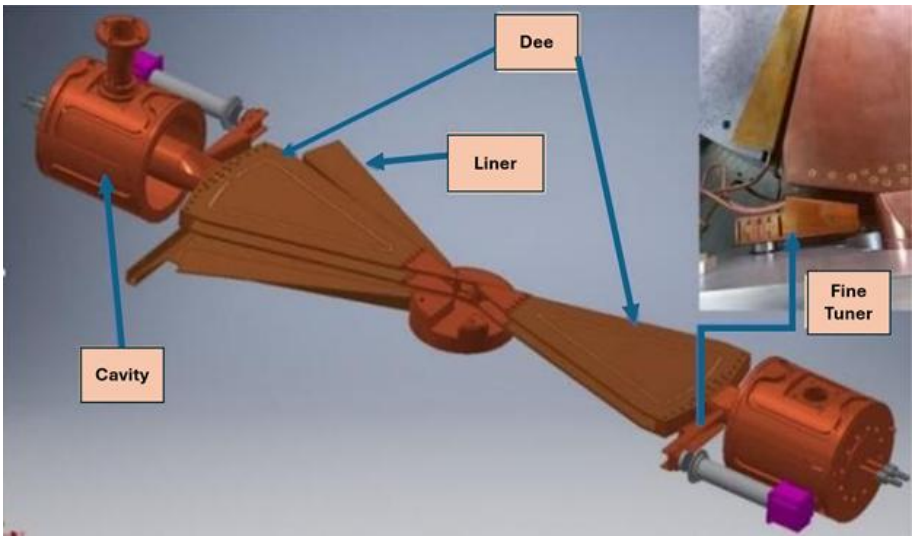

Figure 8. Installed fine tuner in the dee to control/minimize the reflected RF power

3.6. Limitations and future improvements

Despite these improvements, certain limitations provide a roadmap for future developments. Currently, the maximum driver output of ~2 kW still requires the final amplifier to operate at elevated levels to consistently reach 10 kW; adding more pallets in parallel could further reduce the stress on the triode stage. Additionally, the long-term reliability and thermal stress profiles under continuous 24/7 operation have yet to be fully characterized. Future enhancements could include adaptive impedance-matching networks that automatically compensate for load variations. A practical extension would use reflected power or measured complex impedance as feedback for motorized coupler rotation and/or variable-capacitor tuning, following the control intent demonstrated in adaptive RF matching studies [23], [24]. Integrating real-time monitoring for reflected power, temperature, and gain stability would further enhance operational safety. This study does not report MTBF, wall-plug or drain efficiency, standardized EMI/EMC compliance, or a quantified reduction in thermal drift; these metrics should therefore be included in future long-duration characterization rather than inferred from the present measurements.

3.7. Operational impact on DECY-13

The implementation of the combined driver amplifier had a direct impact on the performance of DECY-13. With stable RF delivery, the cyclotron consistently achieves the dee voltages necessary for 13 MeV proton acceleration. The improved drive margin and impedance matching reduce the risk of operation near mismatch or amplifier-overload conditions, thereby supporting more reliable facility operation [20].

4. CONCLUSION

This study successfully designed, constructed, and evaluated a modular combined driver amplifier for the DECY-13 cyclotron in Yogyakarta. Combining two BLF188XR amplifier pallets through a Wilkinson-type configuration increased the available RF driver power from approximately 700 W to 2 kW, providing greater excitation margin for the 3CX15000A7 triode final stage to deliver 7–10 kW for 13 MeV proton acceleration. Experimental evaluation demonstrated stable continuous-wave operation at 77.76 MHz, with custom PTFE coaxial capacitors and adjustment of the inductive coupler orientation providing reactive compensation and impedance matching close to 50 Ω. These results demonstrate a practical approach to upgrading cyclotron RF systems through modular solid-state amplification.

Further development should investigate additional amplifier pallets to expand the available drive margin, adaptive impedance-matching networks to accommodate load variations, and real-time monitoring of reflected power, temperature, impedance, and gain stability. Quantitative characterization of efficiency, harmonic emissions, EMI/EMC performance, thermal drift, and long-term reliability is needed to establish performance beyond the reported measurements. These developments could support the adaptation of the modular architecture to other medium-energy cyclotrons and inform its extension to larger accelerator and plasma-heating RF systems.

ACKNOWLEDGMENTS

The authors gratefully acknowledge the Deputy for Research Facilities and Innovation for the valuable evaluations and continued support provided throughout this project. Appreciation is also extended to all individuals who contributed administrative and operational assistance. During manuscript preparation, the authors used GPT-6 (OpenAI) to assist with grammar editing and to check manuscript completeness and internal consistency against the submission requirements. The authors reviewed and revised the suggested changes and took full responsibility for the final manuscript.

FUNDING INFORMATION

This research was funded by the Indonesia Endowment Fund for Education (LPDP) and the National Research and Innovation Agency (BRIN) through the Program Riset dan Inovasi untuk Indonesia Maju (RIIM), under the Skema Riset dan Inovasi untuk Indonesia Maju Invitasi Strategis Gelombang ke-2, with contract numbers B-4131/II.7.5/TK/01.03/02/2025 and B-1703/III.2/TK.01.03/1/2-25. The article processing charge (APC) was separately funded by the Department of Computer Science and Electronics, Universitas Gadjah Mada, through its 2026 Publication Funding Program, as the RIIM funding scheme does not permit the use of grant funds to cover APCs.

AUTHOR CONTRIBUTIONS STATEMENT

This journal uses the Contributor Roles Taxonomy (CRediT) to recognize individual author contributions, reduce authorship disputes, and facilitate collaboration.

Name of Author	C	M	So	Va	Fo	I	R	D	O	E	Vi	Su	P	Fu
Trimarji Atmono	✓	✓	✓	✓	✓	✓		✓	✓	✓				
Muhammad Husni Santriaji	✓	✓				✓		✓	✓	✓	✓	✓	✓	✓
Rizky Fajarudin			✓	✓		✓	✓			✓	✓			
Tri W. Supardi		✓			✓		✓		✓	✓		✓		
Agus S. Wismogroho		✓			✓		✓			✓		✓		
Muhamad Ikhlasul Amal					✓				✓	✓				

C : **C**onceptualization
M : **M**ethodology
So : **So**ftware
Va : **Va**lidation
Fo : **Fo**rmal analysis
I : **I**nvestigation
R : **R**esources
D : **D**ata Curation
O : Writing - **O**riginal Draft
E : Writing - Review & **E**diting
Vi : **Vi**sualization
Su : **Su**pervision
P : **P**roject administration
Fu : **Fu**nding acquisition

CONFLICT OF INTEREST STATEMENT

The authors declare that they have no known competing financial interests or personal relationships that could have influenced the work reported in this study.

DATA AVAILABILITY

The data that support the findings of this study are available from the corresponding author, upon reasonable request.

REFERENCES

[1] G. Chen *et al.*, "Design and commissioning of RF system for SC200 cyclotron," in *CYC 2019 - Proceedings of the 22nd International Conference on Cyclotrons and their Applications*, Sep. 2020, pp. 21–23, doi: 10.18429/JACoW-Cyclotrons2019-MOP001.

[2] X. Zhang *et al.*, "Design and commissioning of rf system for sc240 cyclotron," *Journal of Nuclear Science and Technology*, vol. 63, no. 5, pp. 594–602, May 2026, doi: 10.1080/00223131.2025.2576809.

[3] L. H. Duc, M. Jobs, T. Lofnes, R. Ruber, J. Olsson, and D. Dancila, "Feedback compensated 10 kW solid-state pulsed power amplifier at 352 MHz for particle accelerators," *Review of Scientific Instruments*, vol. 90, no. 10, 2019, doi: 10.1063/1.5110981.

[4] R. Tong, O. Bengtsson, J. Olsson, A. Backlund, and D. Dancila, "Kilowatt power amplifier with improved power back-off efficiency for cyclotron application," *IEEE Transactions on Microwave Theory and Techniques*, vol. 70, no. 2, pp. 1401–1409, Feb. 2022, doi: 10.1109/TMTT.2021.3134957.

[5] A. Nassiri *et al.*, "History and technology developments of radio frequency (RF) systems for particle accelerators," *IEEE Transactions on Nuclear Science*, vol. 63, no. 2, pp. 707–750, Apr. 2016, doi: 10.1109/TNS.2015.2485164.

[6] Z. Yin *et al.*, "RF control hardware design for cyciae-100 cyclotron," *Nuclear Instruments and Methods in Physics Research, Section A: Accelerators, Spectrometers, Detectors and Associated Equipment*, vol. 801, pp. 104–107, 2015, doi: 10.1016/j.nima.2015.08.057.

[7] Communications & Power Industries, "3CX15,000A7." 2026. [Online]. Available: https://www.relltubes.com/documents/Datasheets/3CX15-000A7.pdf.

[8] M. R. Del Piero, A. H. Shali, A. Dwiatmaja, and I. N. Musyarrofah, "Indirect RLC measurement of DECY-13 cyclotron cavity lumped circuit model using impedance measurement," in *AIP Conference Proceedings*, 2024, doi: 10.1063/5.0192948.

[9] G. Liu, Y. Song, G. Chen, Y. Zhao, and X. Zhang, "Thermal consideration and optimization for high-power operation of a cyclotron rf cavity," *Nuclear Instruments and Methods in Physics Research, Section A: Accelerators, Spectrometers, Detectors and Associated Equipment*, vol. 908, pp. 143–147, Nov. 2018, doi: 10.1016/j.nima.2018.08.037.

[10] F. Abubaker, F. Scopelliti, M. A. Pometti, M. Ippolito, and G. Russo, "Cyclotron for PET: system upgrade after 13 years of service," *Radiochemistry*, vol. 63, no. 1, pp. 77–86, Jan. 2021, doi: 10.1134/S1066362221010124.

[11] D. Bora *et al.*, "Ion cyclotron resonance heating system on Aditya," *Sadhana - Academy Proceedings in Engineering Sciences*, vol. 30, no. 1, pp. 21–46, Feb. 2005, doi: 10.1007/BF02710077.

[12] C. Boudot, J. B. Droin, P. Sciora, Y. Besanger, B. Robisson, and A. L. Mazauric, "Small modular reactor-based solutions to enhance grid reliability: impact of modularization of large power plants on frequency stability," *EPJ Nuclear Sciences and Technologies*, vol. 8, 2022, doi: 10.1051/epjn/2022015.

[13] Z. Y. Wang *et al.*, "Development of 16mev compact cyclotron RF system with solid-state amplifier and fully digital controller," *Journal of Instrumentation*, vol. 19, no. 12, Dec. 2024, doi: 10.1088/1748-0221/19/12/P12012.

[14] M. Gaspar, M. Pedrozzi, L. F. R. Ferreira, and T. Garvey, "A compact 500 MHz 4 kw solid-state power amplifier for accelerator applications," *Nuclear Instruments and Methods in Physics Research, Section A: Accelerators, Spectrometers, Detectors and Associated Equipment*, vol. 637, no. 1, pp. 18–24, 2011, doi: 10.1016/j.nima.2011.02.057.

[15] M. Gaspar and T. Garvey, "A compact 500 MHz 65 kw solid-state power amplifier for accelerator applications," *IEEE Transactions on Nuclear Science*, vol. 63, no. 2, pp. 699–706, Apr. 2016, doi: 10.1109/TNS.2015.2477603.

[16] A. Jain *et al.*, "Modular 20 kW solid-state RF amplifier for Indus-2 synchrotron radiation source," *Nuclear Instruments and Methods in Physics Research, Section A: Accelerators, Spectrometers, Detectors and Associated Equipment*, vol. 676, pp. 74–83, 2012, doi: 10.1016/j.nima.2012.02.023.

[17] Y. He *et al.*, "Development of solid-state amplifier for accelerator project based on the concept of standardization," *Physical Review Accelerators and Beams*, vol. 26, no. 11, Nov. 2023, doi: 10.1103/PhysRevAccelBeams.26.112002.
[18] R. K. Deo, G. Anghore, M. K. Jain, and M. Lad, "Design and development of 3 kW pulsed solid-state RF power amplifier using two LDMOS in parallel configuration at 1 MHz," *Journal of Instrumentation*, vol. 13, no. 12, Dec. 2018, doi: 10.1088/1748-0221/13/12/T12002.
[19] S. Debnath, J. Qin, B. Bahrani, M. Saeedifard, and P. Barbosa, "Operation, control, and applications of the modular multilevel converter: a review," *IEEE Transactions on Power Electronics*, vol. 30, no. 1, pp. 37–53, 2015, doi: 10.1109/TPEL.2014.2309937.
[20] T. Atmono, A. Dwiatmaja, M. R. Del Piero, and A. Suntoro, "A character driver of amplifier for the RF-generator 77.78 mhz at cyclotron DECY-13 in Yogyakarta," *International Journal of Power Electronics and Drive Systems*, vol. 15, no. 3, pp. 1719–1725, 2024, doi: 10.11591/ijpeds.v15.i3.pp1719-1725.
[21] H. S. Song, Y. B. Kong, E. J. Lee, and M. G. Hur, "Impedance-matching network box of the RF power amplifier for the RFT-30 cyclotron," *Journal of the Korean Physical Society*, vol. 73, no. 8, pp. 1186–1190, Oct. 2018, doi: 10.3938/jkps.73.1186.
[22] Y. Wu, Z. F. He, W. S. Wan, P. P. Zheng, and Z. M. Dai, "Optimization design of the cavity tuning and RF input coupler for an 11 MeV superconducting cyclotron," *Journal of Instrumentation*, vol. 19, no. 8, Aug. 2024, doi: 10.1088/1748-0221/19/08/P08021.
[23] C. A. Rodríguez, J. Viola, and Y. Q. Chen, "An radio frequency impedance matching control benchmark system for advanced control strategies evaluation," in *Proceedings of the ASME Design Engineering Technical Conference*, Aug. 2021, doi: 10.1115/DETC2021-70211.
[24] M. Alibakhshikenari *et al.*, "Optimum power transfer in RF front-end systems using adaptive impedance matching technique," *Scientific Reports*, vol. 11, no. 1, Jun. 2021, doi: 10.1038/s41598-021-91355-4.
[25] Z. Yin, B. Ji, X. Fu, X. Cao, Z. Zhao, and T. Zhang, "Design of RF system for cyciae-230 superconducting cyclotron," *Nuclear Instruments and Methods in Physics Research Section A: Accelerators, Spectrometers, Detectors and Associated Equipment*, vol. 854, pp. 25–30, May 2017, doi: 10.1016/j.nima.2017.02.051.
[26] Ampleon, "BLF188XR; blf188xrs power ldmos transistor," no. September, pp. 1–15, 2015, [Online]. Available: https://www.ampleon.com/documents/data-sheet/BLF188XR_BLF188XRS.pdf.
[27] E. J. Wilkinson, "An n-way hybrid power divider," *IRE Transactions on Microwave Theory and Techniques*, vol. 8, no. 1, pp. 116–118, Jan. 1960, doi: 10.1109/TMTT.1960.1124668.
[28] B. V. Ramarao *et al.*, "Development of 3 kW at 325 MHz solid-state RF power amplifier using four power amplifier modules," *Nuclear Instruments and Methods in Physics Research, Section A: Accelerators, Spectrometers, Detectors and Associated Equipment*, vol. 735, pp. 283–290, Jan. 2014, doi: 10.1016/j.nima.2013.09.053.
[29] S. Xu, S. Xu, D. Xu, Q. Qian, W. Sun, and J. Zhu, "A review on recent effort of conductive EMI suppression methods in high-frequency power converters," *IET Power Electronics*, vol. 15, no. 16, pp. 1921–1935, Dec. 2022, doi: 10.1049/pel2.12348.
[30] F. A. Kharanaq, A. Emadi, and B. Bilgin, "Modeling of conducted emissions for EMI analysis of power converters: state-of-the-art review," *IEEE Access*, vol. 8, pp. 189313–189325, 2020, doi: 10.1109/ACCESS.2020.3031693.
[31] K. Mainali and R. Oruganti, "Conducted EMI mitigation techniques for switch-mode power converters: a survey," *IEEE Transactions on Power Electronics*, vol. 25, no. 9, pp. 2344–2356, Sep. 2010, doi: 10.1109/TPEL.2010.2047734.
[32] S. Chen *et al.*, "Reflection power suppression for solid-state amplifiers with combiner optimization," *Review of Scientific Instruments*, vol. 94, no. 3, Mar. 2023, doi: 10.1063/5.0127489.
[33] J. Lee *et al.*, "Design of 83.2 MHz RF cavity for skkucy-10 cyclotron," *Nuclear Instruments and Methods in Physics Research Section A: Accelerators, Spectrometers, Detectors and Associated Equipment*, vol. 939, 2019, doi: 10.1016/j.nima.2019.05.072.
[34] B. Kaizer *et al.*, "High power solid state RF amplifiers for SARAF phase II Linac," *Nuclear Instruments and Methods in Physics Research Section A: Accelerators, Spectrometers, Detectors and Associated Equipment*, vol. 1039, Sep. 2022, doi: 10.1016/j.nima.2022.167001.
[35] G. Torrisi *et al.*, "Electromagnetic simulations and measurements of the k-800 superconducting cyclotron RF cavity at INFN-LNS," *Applied Sciences*, vol. 11, no. 13, Jun. 2021, doi: 10.3390/app11135995.
[36] J. K. Mishra, S. Singh, S. Shrotriya, B. V. Ramarao, M. Pande, and G. Joshi, "Design and development of efficient and compact 20 kW 325 MHz solid-state amplifier for superconducting accelerator applications," *Review of Scientific Instruments*, vol. 95, no. 5, May 2024, doi: 10.1063/5.0193482.
[37] R. Tong, O. Bengtsson, A. Backlund, and D. Dancila, "Compact and highly efficient kilowatt lumped push–pull power amplifier for cyclotron in radioisotopes production," *IEEE Transactions on Microwave Theory and Techniques*, vol. 69, no. 1, pp. 723–731, Jan. 2021, doi: 10.1109/TMTT.2020.3035353.
[38] C. de la Morena *et al.*, "Solid-state radiofrequency amplifier technology for fusion applications," *Fusion Engineering and Design*, vol. 220, Nov. 2025, doi: 10.1016/j.fusengdes.2025.115346.
[39] J. A. V. M. Farias, A. F. Cupertino, H. A. Pereira, S. I. Seleme, and R. Teodorescu, "On converter fault tolerance in MMC-HVDC systems: a comprehensive survey," *IEEE Journal of Emerging and Selected Topics in Power Electronics*, vol. 9, no. 6, pp. 7459–7470, Dec. 2021, doi: 10.1109/JESTPE.2020.3032393.

BIOGRAPHIES OF AUTHORS



Trimarji Atmono is a senior researcher at the Research Center for System Nanotechnology, National Research and Innovation Agency (BRIN), Indonesia. He received his degree in physics, specializing in experimental nuclear physics, from Gadjah Mada University, Yogyakarta, Indonesia, in 1984. He obtained his Ph.D. degree in materials science from the University of Kassel, Germany, in 1992. He was awarded research fellowships by the Alexander von Humboldt Foundation, Germany, and conducted research experiments in Germany during 1996–1997, 2002, and 2006. He was appointed professor in 2009. His research interests include materials science, electrical engineering, radio-frequency (RF) power generation and transmission, thin films, and surface modification. He can be contacted at email: trim001@brin.go.id or natmono@yahoo.de.



Muhammad Husni Santriaji is an assistant professor in the Department of Computer Science and Electronics, Universitas Gadjah Mada, Indonesia. He received his Ph.D. degree from the University of Chicago, United States, in 2022. Following his doctoral studies, he worked as a postdoctoral researcher at the University of Central Florida, United States, from 2022 to 2024. He currently serves as the head of the Basic Electronics Laboratory at Universitas Gadjah Mada. His research interests include computer architecture, cybersecurity, and the design of secure and reliable computing systems. He can be contacted at email: muhammad.husnisantriaji@ugm.ac.id.



Rizky Fajarudin is a researcher and engineer at the Research Center for Accelerator Technology, Yogyakarta, Indonesia. He received his bachelor's degree in electronics and instrumentation from the Polytechnic Institute of Nuclear Technology, Yogyakarta, Indonesia, in 2019, and his Master of Engineering degree from the Department of Accelerator Science, The Graduate University for Advanced Studies (SOKENDAI), Japan, in 2026. Since 2021, he has been working as a researcher and engineer specializing in instrumentation and control systems. His research interests include instrumentation and control systems and radio-frequency (RF) systems. He can be contacted at email: rizk043@brin.go.id.



Tri Wahyu Supardi is an assistant professor in the Department of Computer Science and Electronics, Faculty of Mathematics and Natural Sciences, Universitas Gadjah Mada, Indonesia. He received his bachelor's degree in electronics and instrumentation and his master's degree in computer science from Universitas Gadjah Mada. He is affiliated with the Electronics and Instrumentation Laboratory at the same university. His research interests include electronics, instrumentation, radio-frequency (RF) systems, and microwave technologies. He can be contacted at email: twsupardi@ugm.ac.id.



Agus Sukarto Wismogroho received his master's degree in materials science and engineering from Osaka University, Japan, in 2004, and his Ph.D. degree in the same field from Kagoshima University, Japan, in 2009. He is a senior researcher at the Research Center for System Nanotechnology, National Research and Innovation Agency (BRIN), Indonesia, and a member of the Thin Films and Surface Modification Research Group. His research interests include materials science and engineering, thin films and surface modification, and the development of functional materials for physical instrumentation and measurement systems. His research focuses on the development and characterization of thin-film-based materials for advanced instrumentation applications. He can be contacted at email: agus109@brin.go.id or agussukarto@gmail.com.



Muhamad Ikhlasul Amal is a researcher specializing in materials science and nanotechnology. He received his Ph.D. degree in materials science and engineering from Yeungnam University, South Korea, following the completion of his Master of Science degree in materials science at Universitas Indonesia and his Bachelor of Science degree in chemistry at Institut Teknologi Bandung, Indonesia. He is currently a researcher at the Research Center for Nanotechnology Systems, National Research and Innovation Agency (BRIN), Indonesia. Previously, he served as a postdoctoral researcher at Yeungnam University. His research interests include semiconductors, thin films, energy materials, photocatalysis, and zinc oxide (ZnO) nanostructures for solar cell applications. He can be contacted at email: muha089@brin.go.id.